Schlumberger

Company: **PETRO-CANADA**

Well: **PETRO-CANADA BLACKWATER KWIJIKA M-59**
Field: **KWIJIKA**
Province: **NORTHWEST TERRITORIES** ***** MD *****

ENVIRONMENTAL MEASUREMENT
BOREHOLE GRAPHICS LOG

N E B COPY

Province: NORTHWEST TERRITORIES
Field: KWIJIKA
Location: LSD: M-59
Well: PETRO-CANADA BLACKWATER KWIJIKA M-59
Company: PETRO-CANADA

LOCATION

LSD: M-59
UWID: 300M596440122300

Elev.: K.B. 252.1 m
G.L. 245.9 m
D.F. 251.8 m

Permanent Datum: GROUND LEVEL — Elev.: 245.9 m
Log Measured From: KELLY BUSHING — 6.2 m above Perm. Datum
Drilling Measured From: KELLY BUSHING

API Serial No.
1165

Logging Date		23-Feb-2008													
Run Number		ONE													
Depth Driller		1200 m													
Schlumberger Depth		1201 m													
Bottom Log Interval		1175.4 m													
Top Log Interval		347.5 m													
Casing Driller Size @ Depth		244.500 mm @ 348 m													
Casing Schlumberger		347.5 m													
Bit Size		222.000 mm													
Type Fluid In Hole		KCL POLYMER													
MUD Density	Viscosity	1180 kg/m3	47 s												
MUD Fluid Loss	PH	7 cm3	10												
Source Of Sample		FLOWLINE													
RM @ Measured Temperature		0.117 ohm.m @ 20 degC													
RMF @ Measured Temperature		0.103 ohm.m @ 20 degC													
RMC @ Measured Temperature		0.228 ohm.m @ 20 degC													
Source RMF	RMC	PRESSED	PRESSED												
RM @ MRT	RMF @ MRT	0.100 @ 27	0.088 @ 27												
Maximum Recorded Temperatures		27 degC													
Circulation Stopped	Time	23-Feb-2008	7:15												
Logger On Bottom	Time	23-Feb-2008	22:05												
Unit Number	Location	4301	NORMAN WELLS												
Recorded By		J.ROLLINGS / R. JACOBS													
Witnessed By		G. TIMMONS / G. DEON													

	Run 1	Run 2	Run 3	Run 4
Logging Date				
Run Number				
Depth Driller				
Schlumberger Depth				
Bottom Log Interval				
Top Log Interval				
Casing Driller Size @ Depth	@	@		
Casing Schlumberger				
Bit Size				
MUD Type Fluid In Hole				
MUD Density / Viscosity				
MUD Fluid Loss / PH				
Source Of Sample				
RM @ Measured Temperature	@	@		
RMF @ Measured Temperature	@	@		
RMC @ Measured Temperature	@	@		
Source RMF / RMC				
RM @ MRT / RMF @ MRT	@ @	@ @		
Maximum Recorded Temperatures				
Circulation Stopped / Time				
Logger On Bottom / Time				
Unit Number / Location				
Recorded By				
Witnessed By				

DEPTH SUMMARY LISTING

Date Created: 23-FEB-2008 23:31:57

Depth System Equipment

Depth Measuring Device

Type: IDW-B
Serial Number: 6423
Calibration Date: 15-FEB-2008
Calibrator Serial Number: 4
Calibration Cable Type: 7-46P
Wheel Correction 1: -4
Wheel Correction 2: -5

Tension Device

Type: CMTD-B/A
Serial Number: 2565
Calibration Date: 15-FEB-2008
Calibrator Serial Number: -999
Calibration Gain: 0.88
Calibration Offset: 336.00

Logging Cable

Type: 7-46A XXS
Serial Number: 6199
Length: 7800.14 M

Conveyance Method: Wireline
Rig Type: Land

Depth Control Parameters

Log Sequence: Subsequent Log In the Well
Reference Log Name: PLATFORM EXPRESS COMPENSATED NEUTRON DUAL LITHO-DENSITY LOG
Reference Log Run Number: ONE
Reference Log Date: 23-FEB-2008

Depth Control Remarks

1. IDW IS PRIMARY DEPTH MEASUREMENT
2. Z-CHART USED AS A SECONDARY DEPTH MEASUREMENTS
3.
4.
5.
6.

OTHER SERVICES1
OS1: PEX-HRLA-TLD2-HNGS
OS2: FMI-DSI-EMS
OS3:
OS4:
OS5:

OTHER SERVICES2
OS1:
OS2:
OS3:
OS4:
OS5:

REMARKS: RUN NUMBER 1
ALL PRESENTATIONS AS PER LOGGING PROGRAM DATED FEB 6,2008
INTERVALS CONFIRMED ON LOCATION BY WELLSITE GEOLOGIST
RUN 1: TLD-HGNS-HRLA-TLD2-HNGS-SP
RUN 2: FMI-DSI-EMS-EMA-GR-SAH-F
MAXIMUM TEMPERATURE TAKEN FROM HEAD THERMOMETER COMPARED TO EMA
DIP & DSI INTERVAL TOOL USED 1 UPPER DIPOLE MODE
SWIVEL SAN DUE TO NEW CABLE
RELABELLED DSI IN FIELD
EMS CALIPERS USED TO COMPUTE HOLE & CEMENT VOLUME
MUD RESISTIVTY PRESENTED ON EMS PRESENTATION
GR NOT REPEATED FROM 1160-1165M DUE TO TELEMETRY ISSUE ON REPEAT
PULLED TIGHT OFF BOTTOM ON REPEAT PASS
C2 FMI CALIPER SENSOR DAMAGED AT 640M, INTERMITTENTLY WORKING TO CS
FMI IMAGES NOT AFFECTED ONLY C2 SENSORS
RIG: AKITA 51
CREW: BILLY LIAM, LARRY DUDUS

	RUN 1	RUN 2
SERVICE ORDER #:	11958895	
RECORDING MEASUREMENT:	15C0-3069	
FLUID LEVEL:		
LOGGED INTERVAL START		
LOGGED INTERVAL STOP		

EQUIPMENT DESCRIPTION

RUN 1 — RUN 2

SURFACE EQUIPMENT

GSR-U/Y 1237
WITM (DTS)-A

DOWNHOLE EQUIPMENT

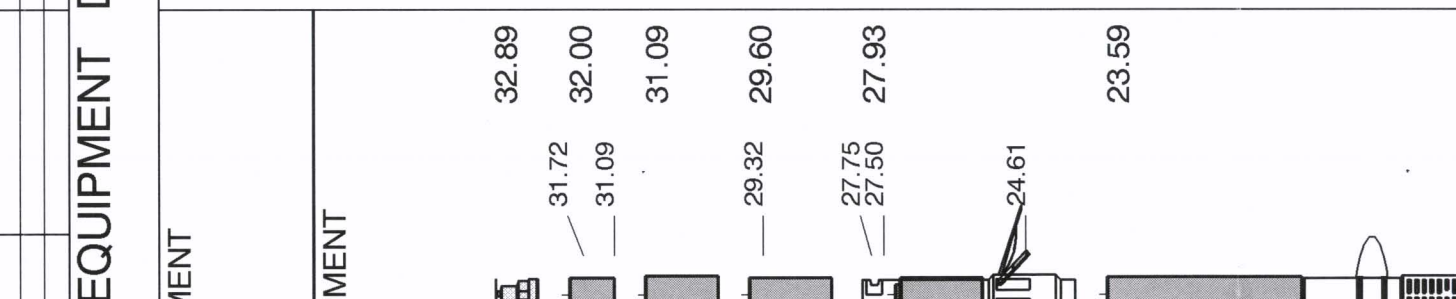

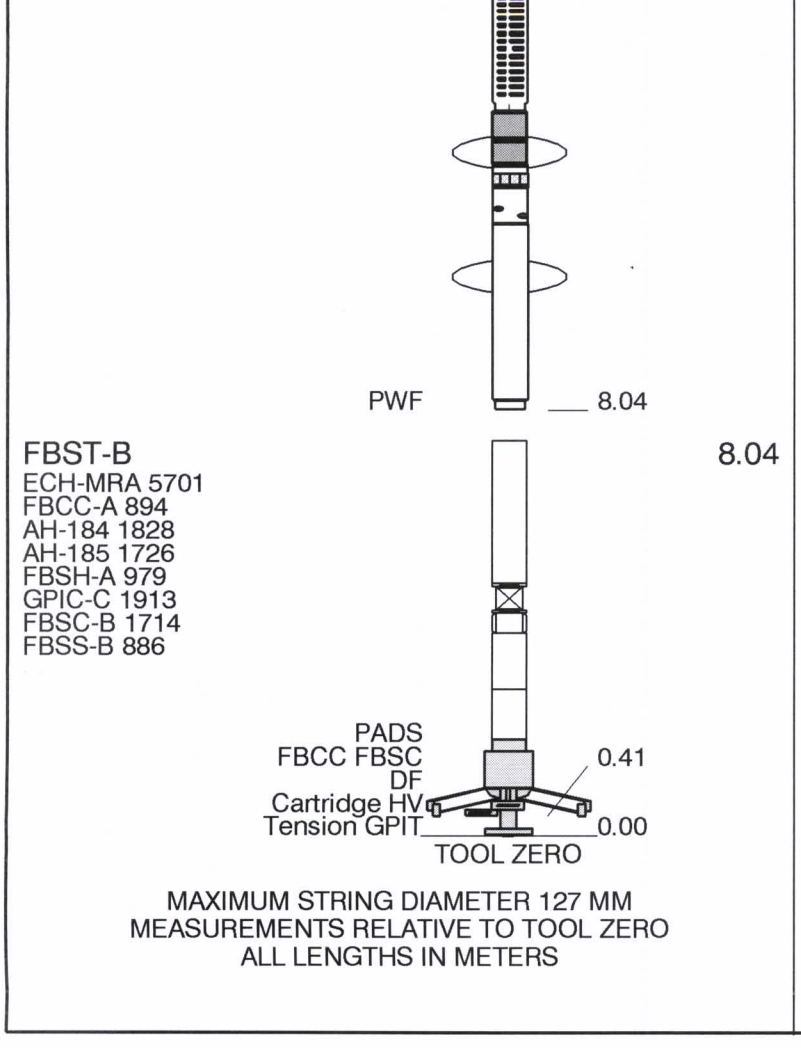

Graphics File Name: BORE_GRAPHIC_5.PDS

Graphics File Created: 24-Feb-2008 01:17

Borehole Cross Section

Parameters

DLIS Name	Description	Value
BGVS	Borehole Graphic Vertical Scale	D200_Metric
BGDI	Borehole Graphic Depth Interval	20_M
BGDM	Borehole Graphic Display Mode	Xsec_Tool_CalAll_Data
BGHW	Borehole Graphic Horizontal Width	750_MM
BGAI	Borehole Graphic Angle Index	None
BGUN	Borehole Graphic Unit	METRIC

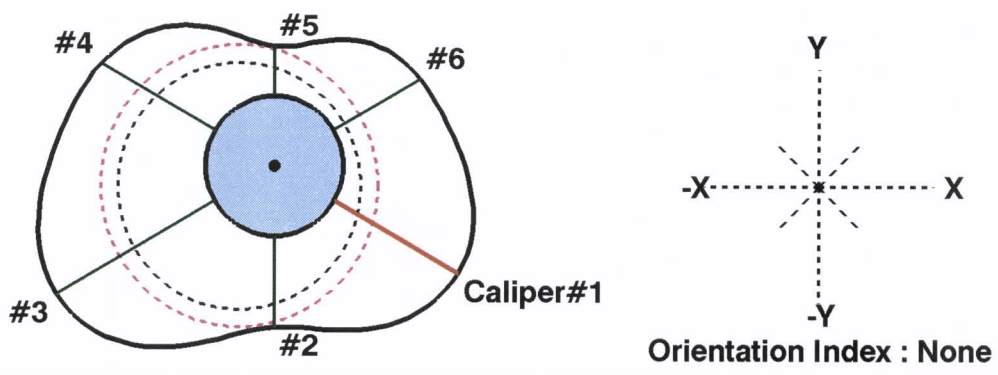

Depth (M)	Future Casing Diameter (FCD) -375.0 (MM) 375.0 / Bit Size (BS) -375.0 (MM) 375.0	Borehole Data DIA. Max (MM)	DIA. Min (MM)	Conf. Factor (DEG)	Orient Angle (DEG)
340.0	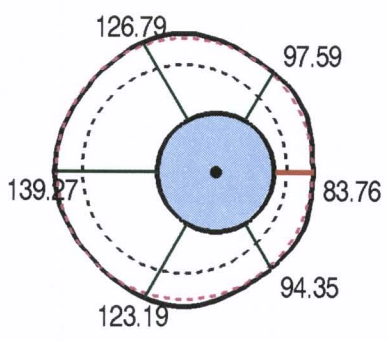	223.1	223.1	73.2	90.0
360.0	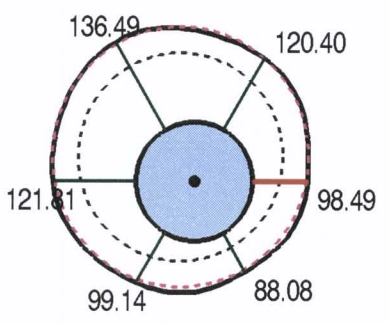	224.6	222.6	70.6	90.0
379.9	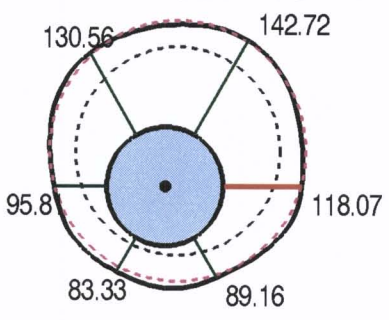	226.0	222.3	75.5	90.0
399.9	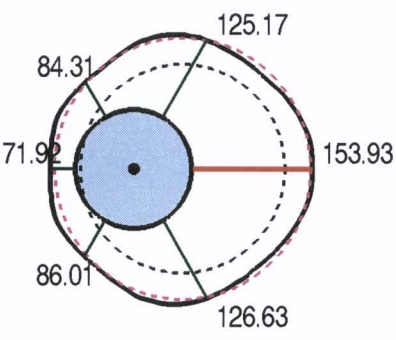	225.8	222.4	78.8	90.0

Depth (M): 340.0, 350, 360.0, 375, 379.9, 400, 399.9

420.0	226.5	222.1	80.9	90.0		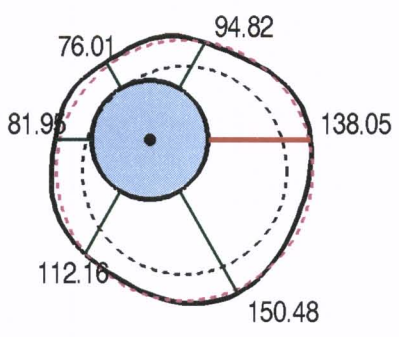
440.0	214.7	214.7	74.8	90.0		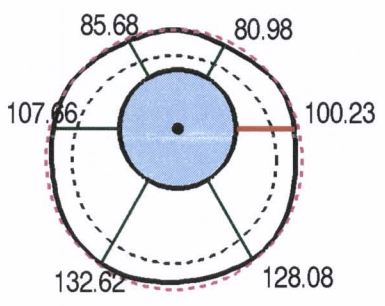
459.9	218.7	216.0	77.0	90.0		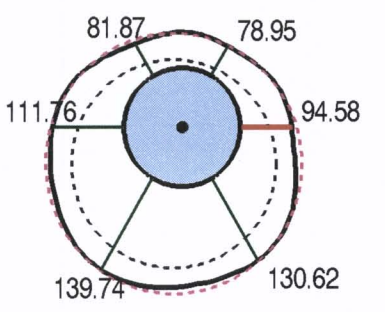
479.9	218.2	216.0	82.3	90.0		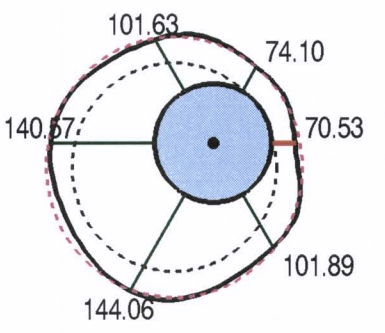
499.9	223.4	221.7	81.2	90.0		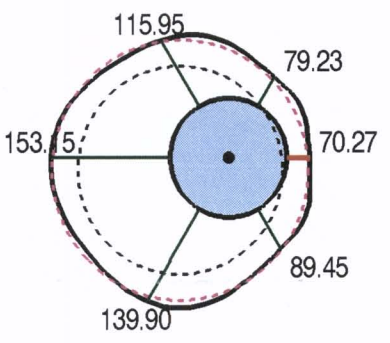
520.0	224.0	222.2	79.5	90.0		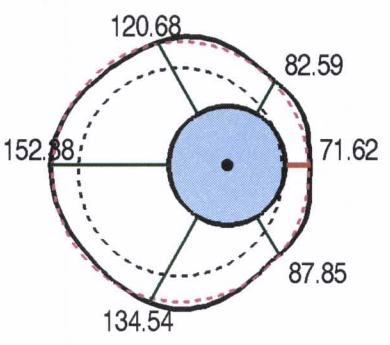
539.9	231.2	223.0	82.6	90.0		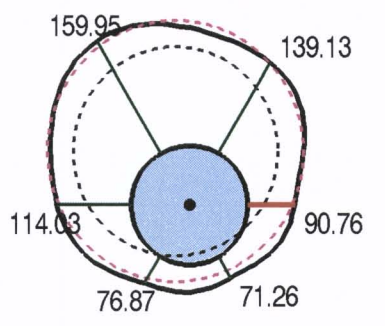
559.9	225.5	222.2	76.9	90.0		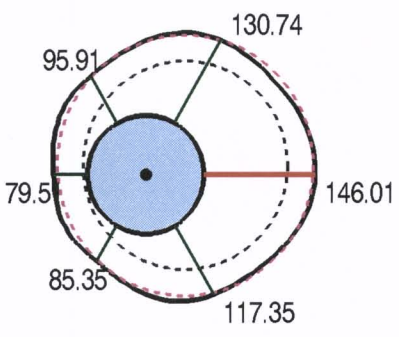
579.9	231.3	221.0	76.2	90.0		

420.0 425 440.0 450 459.9 475 479.9 500 499.9 520.0 525 539.9 550 559.9 575 579.9

600.0	224.9	223.1	77.3	90.0
619.9	232.8	225.7	80.8	90.0
639.9	223.6	222.8	80.5	90.0
659.9	225.3	221.3	78.1	90.0
680.0	224.1	223.5	78.8	90.0
699.9	226.4	222.0	73.6	90.0
719.9	226.8	225.0	67.5	90.0
739.9	225.3	223.7	64.6	90.0

750

775

800

825

850

875

900

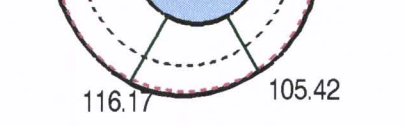

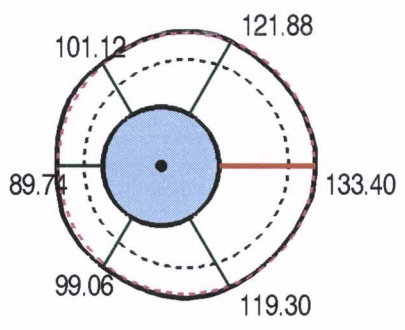

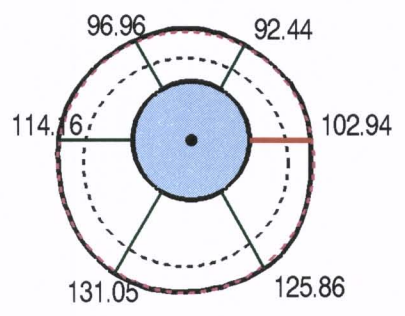

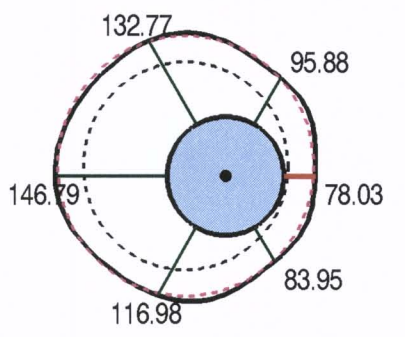

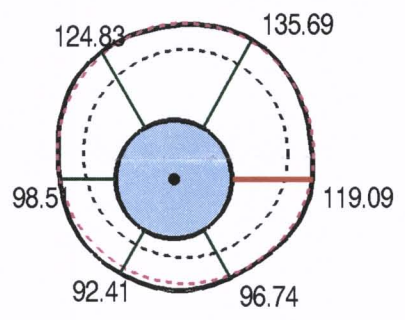

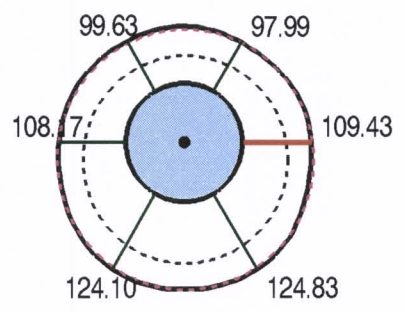

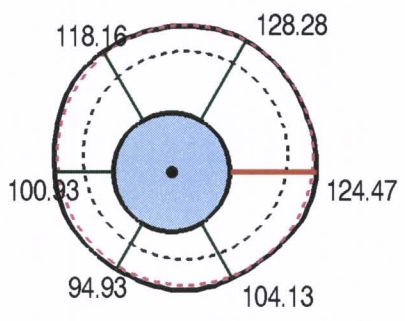

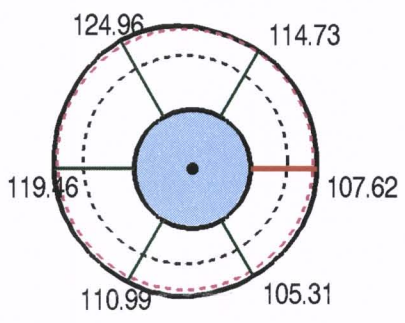

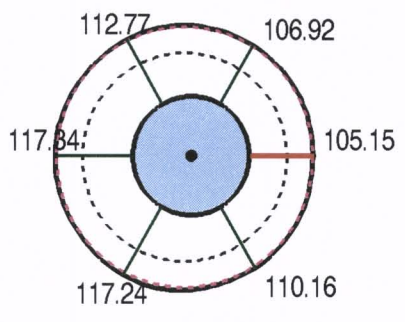

760.0	223.1	222.7	70.0	90.0
780.0	223.5	221.0	70.6	90.0
799.9	224.8	223.2	77.8	90.0
819.9	228.1	222.2	71.5	90.0
840.0	224.5	220.2	68.8	90.0
860.0	225.4	223.3	67.8	90.0
879.9	230.3	226.4	64.3	90.0
899.9	224.2	222.5	63.3	90.0

925

950

975

1000

1025

1050

919.9	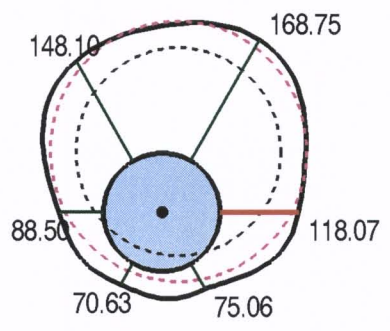	239.4	232.3	86.6	90.0
940.0	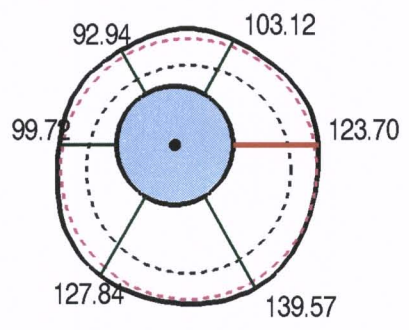	232.5	228.0	71.2	90.0
959.9	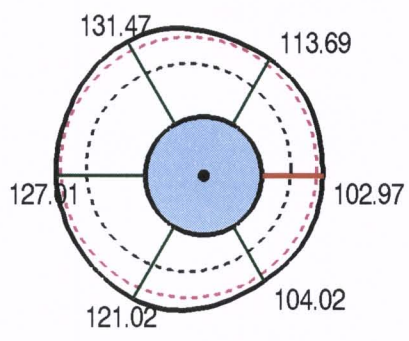	235.5	230.3	66.6	90.0
979.9	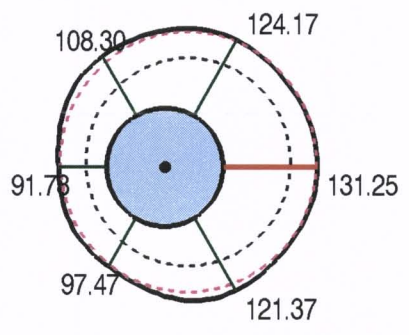	229.7	223.2	69.9	90.0
999.9	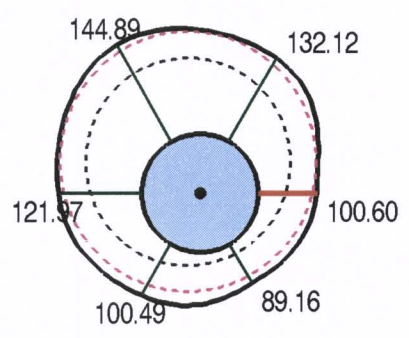	234.1	229.8	74.3	90.0
1020.0	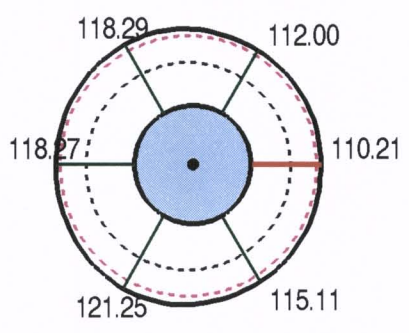	233.4	228.6	62.6	90.0
1039.9	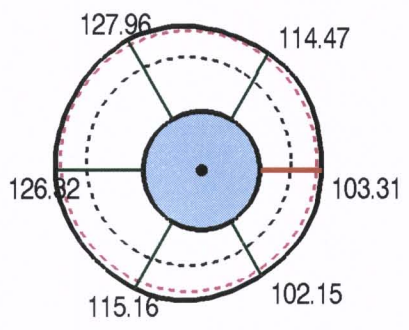	230.1	229.5	67.0	90.0
1059.9	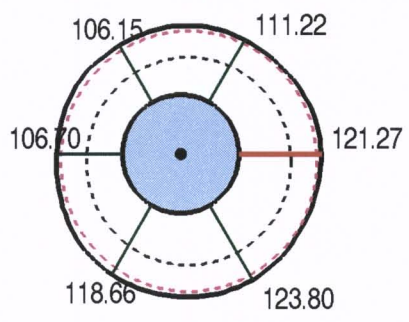	229.9	228.3	64.9	90.0

Depth (M)		Borehole Data			
		DIA. Max (MM)	DIA. Min (MM)	Conf. Factor (DEG)	Orient Angle (DEG)
1075					
	1079.9	230.3	228.7	66.1	90.0
1100	1100.0	228.3	227.3	69.6	90.0
	1119.9	235.5	231.1	74.2	90.0
1125					
	1139.9	226.8	225.4	72.1	90.0
1150					
	1159.9	227.4	222.3	69.5	90.0
1175					
	1180.0	220.1	220.1	78.2	90.0
1200	1200.0	220.1	220.1	78.2	90.0

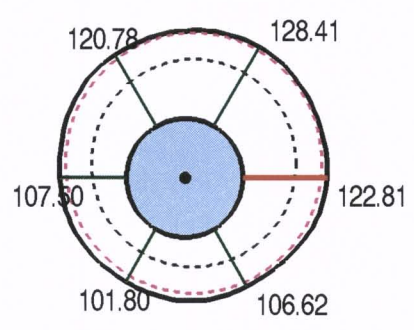

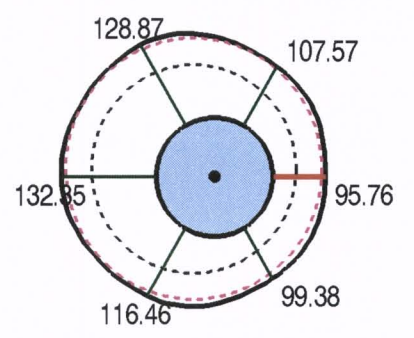

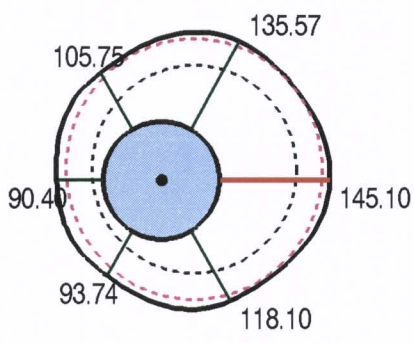

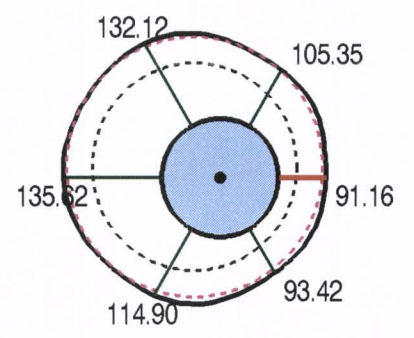

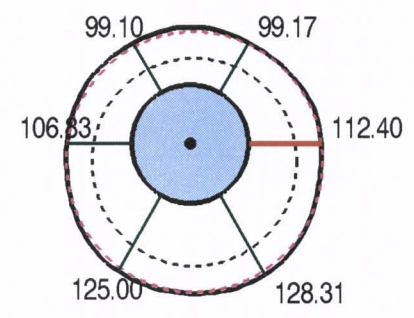

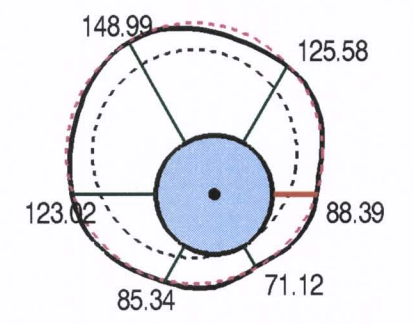

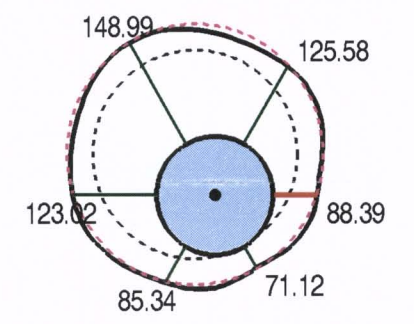

Future Casing Diameter (FCD)

-375.0 (MM) 375.0

Bit Size (BS)

-375.0 (MM) 375.0

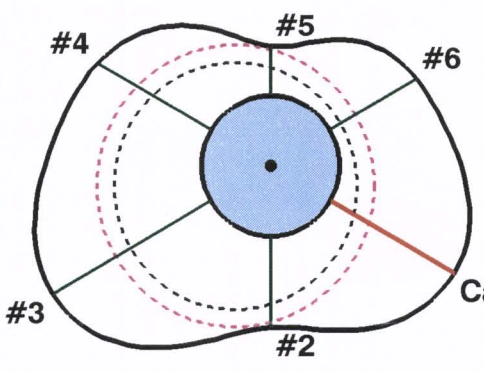

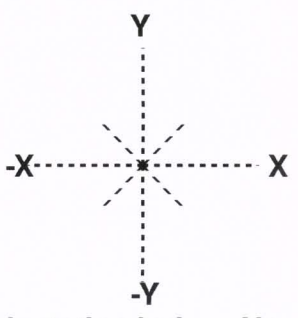

Orientation Index : None

Parameters

DLIS Name	Description	Value
BGVS	Borehole Graphic Vertical Scale	D200_Metric
BGDI	Borehole Graphic Depth Interval	20_M
BGDM	Borehole Graphic Display Mode	Xsec_Tool_CalAll_Data
BGHW	Borehole Graphic Horizontal Width	750_MM
BGAI	Borehole Graphic Angle Index	None
BGUN	Borehole Graphic Unit	METRIC

Borehole Cross Section

Graphics File Name: BORE_GRAPHIC_5.PDS — Graphics File Created: 24-Feb-2008 01:17

Input DLIS Files

DEFAULT	FMI_DSI_EMS_029LUP	FN:44	PRODUCER	23-Feb-2008 22:29	1202.1 M	278.4 M

Output DLIS Files

DEFAULT	FMI_DSI_EMS_031PUP	FN:48	PRODUCER	24-Feb-2008 01:17	1202.1 M	298.6 M
BACKUP	FMI_DSI_EMS_031PUP	FN:49	PRODUCER	24-Feb-2008 01:17	1202.1 M	298.6 M
IMAGE	FMI_DSI_EMS_031PUP	FN:50	PRODUCER	24-Feb-2008 01:17	1202.1 M	298.6 M
REDUCED	FMI_DSI_EMS_031PUP	FN:51	PRODUCER	24-Feb-2008 01:17	1202.1 M	298.6 M

Integrated Hole/Cement Volume Summary

Hole Volume = 34.48 M3

Cement Volume = 13.30 M3 (assuming 177.80 MM casing O.D.)

Computed from 1200.9 M to 348.1 M using data channel(s) RD1 RD2 RD3 RD4 RD5 RD6

OP System Version: 15C0-309

MCM

FBST-B	15C0-309	DSST-B	15C0-309
EMS-B	15C0-309	SGT-N	15C0-309
DTC-H	15C0-309		

PIP SUMMARY

- Integrated Hole Volume Minor Pip Every 0.1 M3
- Integrated Hole Volume Major Pip Every 1 M3
- Integrated Cement Volume Minor Pip Every 0.1 M3
- Integrated Cement Volume Major Pip Every 1 M3
- Time Mark Every 60 S

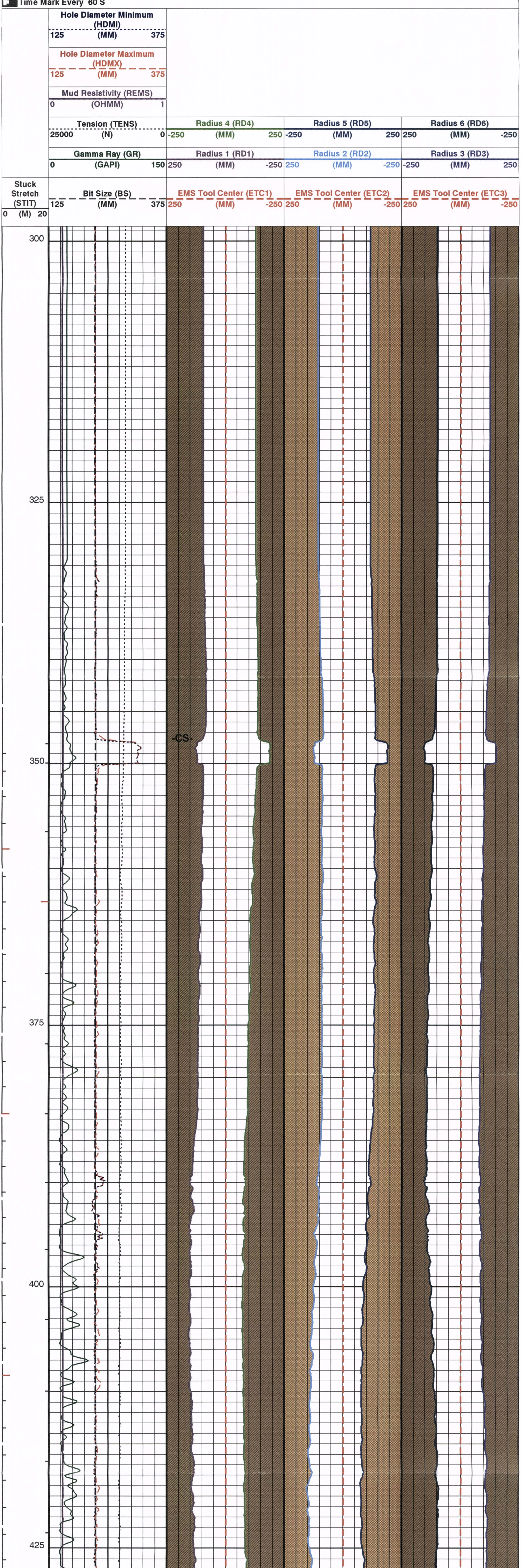

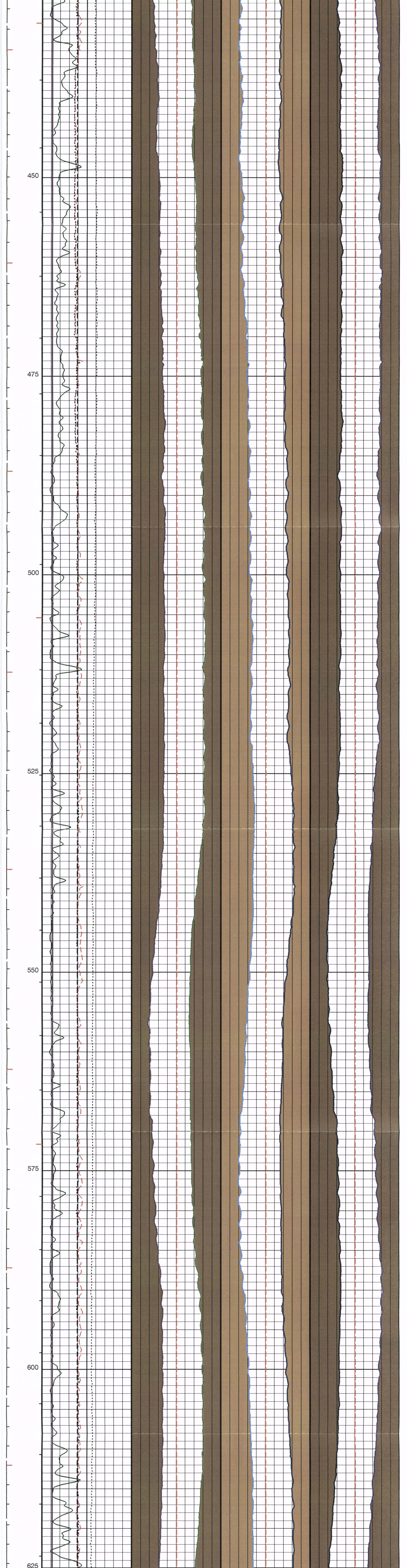
450
475
500
525
550
575
600
625

TENS
STIA
STIT
REMS
HDMI
HDMX
GR
BS
RD1
RD2
RD3
RD4
RD5
RD6
ETC1
ETC2
ETC3
650
675
700
725
750
775
800

1000
975
950
925
900
875
850
825

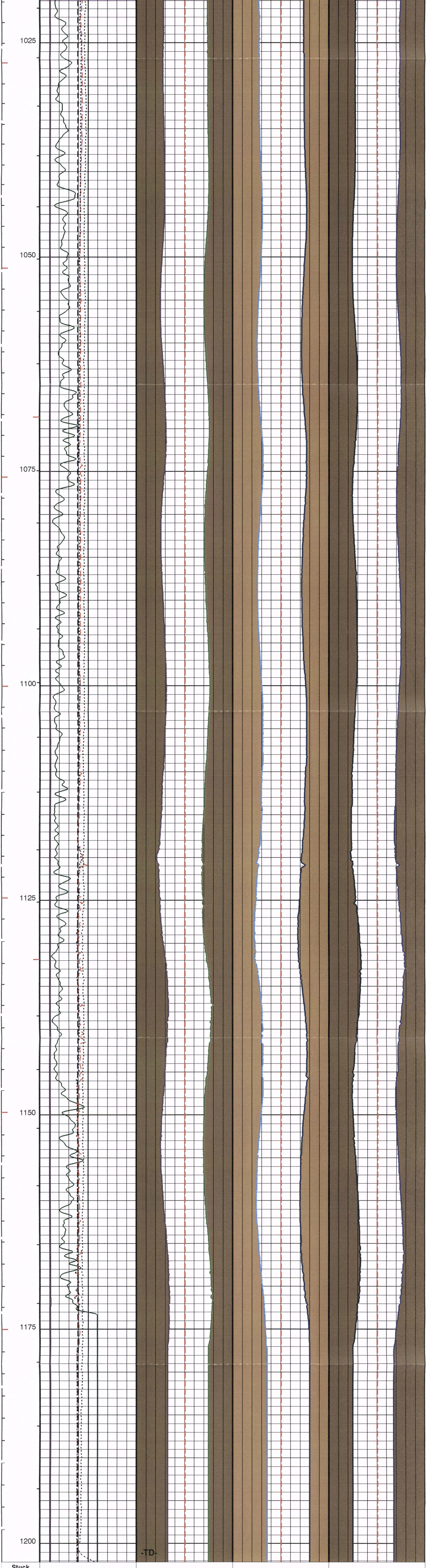

Stuck Stretch (STIT)	Bit Size (BS)	EMS Tool Center (ETC1)	EMS Tool Center (ETC2)	EMS Tool Center (ETC3)
0 (M) 20	125 (MM) 375	250 (MM) -250	250 (MM) -250	250 (MM) -250
	Gamma Ray (GR)	Radius 1 (RD1)	Radius 2 (RD2)	Radius 3 (RD3)
	0 (GAPI) 150	250 (MM) -250	250 (MM) -250	-250 (MM) 250
	Tension (TENS)	Radius 4 (RD4)	Radius 5 (RD5)	Radius 6 (RD6)
	25000 (N) 0	-250 (MM) 250	-250 (MM) 250	250 (MM) -250
	Mud Resistivity (REMS)			
	0 (OHMM) 1			
	Hole Diameter Maximum (HDMX)			

125 (MM) 375

Hole Diameter Minimum (HDMI)

125 (MM) 375

PIP SUMMARY

- Integrated Hole Volume Minor Pip Every 0.1 M3
- Integrated Hole Volume Major Pip Every 1 M3
- Integrated Cement Volume Minor Pip Every 0.1 M3
- Integrated Cement Volume Major Pip Every 1 M3
- Time Mark Every 60 S

Parameters

DLIS Name	Description	Value	
FBST-B: Full-Bore Scanner - B			
ACPP	Accelerometer PROM Presence	PRESENT	
AFMO	Accelerometer Filtering Mode	MOVING_AVERAGE	
ART	Accelerometer Reference Temperature	20	DEGC
EGCO	FMI EMEX and GAIN Correction	NO	
FBCD	Correct Dip Buttons Values by EMEX and Gain	OFF	
FBEF	FMI EMEX filtering activation	OFF	
FBMV	FMI EMEX maximum voltage calculation	OFF	
FDBD	FMI Dead Buttons detection	OFF	
FDBP	FMI Dead Buttons Patching	OFF	
FDFL	FMI DSP Filter Length	1	
FIEQ	FMI Image Equalisation	OFF	
FIGA	FMI Image Gain	1	
FIOF	FMI Image Offset	0	
FLM	FMI Logging Mode	8PAD	
FPSA	FMI Peak Signal Amplitude for Required Servo Level	ON	
GLM	GPIT Logging Mode	DIPM	
GMOD	Gain Mode	MANU	
ICMO	Inclinometry Computation Mode	AUTOMATIC_SELECTION	
MAPP	Magnetometer PROM Presence	PRESENT	
MDEC	Magnetic Field Declination	24.9277	DEG
MRTE	Magneto Reference Temperature	17	DEGC
RBS	Resistivity Button Selection	AUTO	
RBSI	Auto RBS Change Interval	10	
SOFF	Standoff	0	MM
TEMS	GPIT Temperature Sensor Used	BOTH	
U-GPOF	Playback OLD VERSION GPIT FILE (BEFORE OP14 + SRPC-3098-FEB_2006_C) ?	NO	
XGAI_FBST	Gain Value in Manual Mode	40_dB	
XGMO	EMEX & Gain Modes	EmexManu_GainManu	
XMOD	EMEX Voltage Regulation Mode	MANU	
XVOL	EMEX Voltage	0	V
DSST-B: Dipole Shear Imager - B			
AGC1	Automatic Gain Control 1	ON	
AGC2	Automatic Gain Control 2	ON	
AGC3	Automatic Gain Control 3	ON	
AGC4	Automatic Gain Control 4	ON	
AGC5	Automatic Gain Control 5	ON	
AGCX	Automatic Gain Control X	ON	
BARS_MTR1	Length for Monopole Transmitter to Receiver 1	2.7432	M
BHS	Borehole Status	OPEN	
BHT	Bottom Hole Temperature (used in calculations)	27.3	DEGC
CASF	Label Casing Function - Monopole P&S	50	
CDTS	C-Delta-T Shale	328.084	US/M
COLL	Label Slowness Lower Limit - Monopole P&S Compressional	131.234	US/M
COUL	Label Slowness Upper Limit - Monopole P&S Compressional	590.551	US/M
DDE1	Digitizing Delay 1	0	US
DDE2	Digitizing Delay 2	0	US
DDE3	Digitizing Delay 3	0	US
DDE4	Digitizing Delay 4	0	US
DDE5	Digitizing Delay 5	0	US
DDEX	Digitizing Delay X	0	US
DLCS	Label Compressional Source - Dipole Shear	DONT_USE	
DLHS	Label Hole Diameter Source for SOBS Channel	AUTO	
DSHL	Label Slowness Lower Limit - Dipole Shear	246.063	US/M
DSHU	Label Slowness Upper Limit - Dipole Shear	500	US/M
DSI1	Digitizer Sample Interval 1	40	US
DSI2	Digitizer Sample Interval 2	40	US
DSI3	Digitizer Sample Interval 3	40	US
DSI4	Digitizer Sample Interval 4	10	US
DSI5	Digitizer Sample Interval 5	10	US
DSIX	Digitizer Sample Interval X	40	US
DTCS	Compressional Delta-T Source for DTCO Channel	PS_COMP	
DTF	Delta-T Fluid	620.079	US/M
DTM	Delta-T Matrix	183.727	US/M
DTSS	Shear Delta-T Source for DTSM Channel	LOWER_DIPOLE	
DWC1	Digitizer Word Count 1	512	
DWC2	Digitizer Word Count 2	512	
DWC3	Digitizer Word Count 3	512	
DWC4	Digitizer Word Count 4	512	
DWC5	Digitizer Word Count 5	512	
DWCX	Digitizer Word Count X	512	
FDE1	Firing Delay 1	0	
FDE2	Firing Delay 2	0	
FDE3	Firing Delay 3	0	
FDE4	Firing Delay 4	0	
FDE5	Firing Delay 5	0	
FDEX	Firing Delay X	0	
FGM5	First Motion Gate Moveout 5	131	US/M
FGMX	First Motion Gate Moveout X	131	US/M
FILG	Label Fill Gap Control - Monopole P&S	COMP_SHEAR	
FMG5	First Motion Minimum Gate 5	500	US
FMGX	First Motion Minimum Gate X	500	US
FMLL	Slowness Lower Limit - FMD	131.234	US/M
FMRC	Restart Control - FMD	CONTINUE	
FMT5	First Motion Threshold 5	UP	
FMTX	First Motion Threshold X	NONE	
FMUL	Slowness Upper Limit - FMD	590.551	US/M
FNC5	First Motion Noise Counter Input 5	ALO	
FNCX	First Motion Noise Counter Input X	ALO	
FPM	Processing Mode - FMD	NONE	
FTD5	First Motion Threshold Direction 5	UP	
FTDX	First Motion Threshold Direction X	UP	
GAI1	Manual Gain 1	10	
GAI2	Manual Gain 2	10	
GAI3	Manual Gain 3	6	
GAI4	Manual Gain 4	16	
GAI5	Manual Gain 5	16	
GAIX	Manual Gain X	10	
GCSE	Generalized Caliper Selection	BS	
GDEV	Average Angular Deviation of Borehole from Normal	0	DEG
GDT1	Gain Delta-T 1	2625	US/M
GDT2	Gain Delta-T 2	2625	US/M
GDT3	Gain Delta-T 3	2625	US/M
GDT4	Gain Delta-T 4	525	US/M
GDT5	Gain Delta-T 5	525	US/M
GDTX	Gain Delta-T X	2625	US/M
GGRD	Geothermal Gradient	0.018227	DC/M
GIN1	Gain Interval 1	15360	US
GIN2	Gain Interval 2	15360	US
GIN3	Gain Interval 3	15360	US
GIN4	Gain Interval 4	2560	US
GIN5	Gain Interval 5	1600	US
GINX	Gain Interval X	15360	US
GRSE	Generalized Mud Resistivity Selection	EMS_RESIST	
GTSE	Generalized Temperature Selection	EMS_TEMP	
HPF1	High Pass Filter 1	F80	
HPF2	High Pass Filter 2	F80	
HPF3	High Pass Filter 3	F80	
HPF4	High Pass Filter 4	F8K	
HPF5	High Pass Filter 5	F8K	
HPFX	High Pass Filter X	F80	
ISSBAR	Barite Mud Switch	NOBARITE	
ITTS	Integrated Transit Time Source	DTCO	
LFC	Label Formation Character - Monopole P&S	COMP_FIRST	
LPF1	Low Pass Filter 1	F5K	
LPF2	Low Pass Filter 2	F5K	
LPF3	Low Pass Filter 3	F5K	
LPF4	Low Pass Filter 4	F30K	
LPF5	Low Pass Filter 5	F30K	
LPFX	Low Pass Filter X	F5K	
LTXG	Lower Dipole Transmitter Geometry	3962	MM
MAI5	Slowness Averaging Interval - FMD	1067	MM
MATR	Rock Matrix for Neutron Porosity Corrections	SANDSTONE	
MCS	Mean Casing Slowness	187.008	US/M
MDS5	Multishot Delta-T Scatter - FMD	20	US
MTXG	Monopole Transmitter Geometry	4724	MM
MUX1	Sum Difference Multiplexor Input 1	RR	
MUX2	Sum Difference Multiplexor Input 2	RR	
MUX3	Sum Difference Multiplexor Input 3	RR	
MUX4	Sum Difference Multiplexor Input 4	RR	
MUX5	Sum Difference Multiplexor Input 5	RR	
MUXX	Sum Difference Multiplexor Input X	RR	
NTI5	Number Threshold Items 5	0	
NTIX	Number Threshold Items X	0	
NWI1	Number Waveform Items 1	8	
NWI2	Number Waveform Items 2	8	
NWI3	Number Waveform Items 3	0	
NWI4	Number Waveform Items 4	8	
NWI5	Number Waveform Items 5	0	
NWIX	Number Waveform Items X	0	
NWS1	Number Waveforms Stacked 1	1	
NWS2	Number Waveforms Stacked 2	1	
NWS3	Number Waveforms Stacked 3	1	
NWS4	Number Waveforms Stacked 4	1	
NWS5	Number Waveforms Stacked 5	1	
NWSX	Number Waveforms Stacked X	1	
RATE	Firing Rate	R7	
RSMN	Label Shear/Compressional Minimum Ratio - Monopole P&S	1.4	
RSMX	Label Shear/Compressional Maximum Ratio - Monopole P&S	2.12	
RX1G	Receiver 1 Geometry	7468	MM
RX2G	Receiver 2 Geometry	7620	MM
RX3G	Receiver 3 Geometry	7772	MM
RX4G	Receiver 4 Geometry	7925	MM
RX5G	Receiver 5 Geometry	8077	MM
RX6G	Receiver 6 Geometry	8230	MM
RX7G	Receiver 7 Geometry	8382	MM
RX8G	Receiver 8 Geometry	8534	MM
SAM1	DSST Sonic Acquisition Mode 1 - Lower Dipole Mode	EVEN	
SAM2	DSST Sonic Acquisition Mode 2 - Upper Dipole Mode	ODD	
SAM3	DSST Sonic Acquisition Mode 3 - Low Frequency Monopole Mode for Stoneley	OFF	
SAM4	DSST Sonic Acquisition Mode 4 - High Frequency Monopole Mode for P&S	EVEN	
SAM5	DSST Sonic Acquisition Mode 5 - High Frequency Monopole Mode for FMD	OFF	
SAMX	DSST Sonic Acquisition Mode X - Both Dipoles or Monopole Mode for Expert	OFF	
SAS1	STC Sonic Array Status - Lower Dipole	255	
SAS2	STC Sonic Array Status - Upper Dipole	255	
SAS3	STC Sonic Array Status - Monopole Stoneley	255	
SAS4	STC Sonic Array Status - Monopole P&S	255	
SAS5	Sonic Array Status - FMD	255	
SBO1	STC Search Band Offset - Lower Dipole	3000	US
SBO2	STC Search Band Offset - Upper Dipole	3000	US
SBO3	STC Search Band Offset - Monopole Stoneley	3000	US
SBO4	STC Search Band Offset - Monopole P&S	500	US
SBR4	STC Baseline Removal - Monopole P&S	ON	
SBW1	STC Search Bandwidth - Lower Dipole	8000	US
SBW2	STC Search Bandwidth - Upper Dipole	8000	US
SBW3	STC Search Bandwidth - Monopole Stoneley	8000	US
SBW4	STC Search Bandwidth - Monopole P&S	2000	US
SFC1	STC Formation Character - Lower Dipole	SELECTABLE	
SFC2	STC Formation Character - Upper Dipole	SELECTABLE	
SFC3	STC Formation Character - Monopole Stoneley	SELECTABLE	
SFC4	STC Formation Character - Monopole P&S	SELECTABLE	
SFM1	STC Filter - Lower Dipole	B1-3K	
SFM2	STC Filter - Upper Dipole	B1-3K	
SFM3	STC Filter - Monopole Stoneley	B.5-1.5K	
SFM4	STC Filter - Monopole P&S	B3-20K	
SHLL	Label Slowness Lower Limit - Monopole P&S Shear	246.063	US/M
SHT	Surface Hole Temperature	23	DEGC
SHUL	Label Slowness Upper Limit - Monopole P&S Shear	590.551	US/M
SLL1	STC Slowness Lower Limit - Lower Dipole	246.063	US/M
SLL2	STC Slowness Lower Limit - Upper Dipole	246.063	US/M
SLL3	STC Slowness Lower Limit - Monopole Stoneley	590.551	US/M
SLL4	STC Slowness Lower Limit - Monopole P&S	131.234	US/M
SPFS	Sonic Porosity Formula	RAYMER_HUNT	
SPSO	Sonic Porosity Source	DTCO	
SST1	STC Slowness Step - Lower Dipole	13.1234	US/M
SST2	STC Slowness Step - Upper Dipole	13.1234	US/M
SST3	STC Slowness Step - Monopole Stoneley	13.1234	US/M
SST4	STC Slowness Step - Monopole P&S	6.56168	US/M
SSW1	STC Source Waveform - Lower Dipole	WF_SAM1	
SSW2	STC Source Waveform - Upper Dipole	WF_SAM2	
SSW3	STC Source Waveform - Monopole Stoneley	WF_SAM3	
SSW4	STC Source Waveform - Monopole P&S	WF_SAM4	
STLL	Label Slowness Lower Limit - Monopole Stoneley	590.551	US/M
STUL	Label Slowness Upper Limit - Monopole Stoneley	2559.06	US/M
SUL1	STC Slowness Upper Limit - Lower Dipole	2542.65	US/M
SUL2	STC Slowness Upper Limit - Upper Dipole	2542.65	US/M
SUL3	STC Slowness Upper Limit - Monopole Stoneley	2559.06	US/M
SUL4	STC Slowness Upper Limit - Monopole P&S	787.402	US/M
SWD1	STC Slowness Width - Lower Dipole	131.234	US/M
SWD2	STC Slowness Width - Upper Dipole	131.234	US/M
SWD3	STC Slowness Width - Monopole Stoneley	131.234	US/M
SWD4	STC Slowness Width - Monopole P&S	32.8084	US/M
TBDB	Tool String Bottom to DSST Bottom	8044.18	MM
TBE1	STC Time for Baseline Fill - Lower Dipole	0	US

TBF2	STC Time for Baseline Fill - Upper Dipole	0	US
TBF3	STC Time for Baseline Fill - Monopole Stoneley	0	US
TBF4	STC Time for Baseline Fill - Monopole P&S	300	US
TLL1	STC Time Lower Limit - Lower Dipole	600	US
TLL2	STC Time Lower Limit - Upper Dipole	600	US
TLL3	STC Time Lower Limit - Monopole Stoneley	600	US
TLL4	STC Time Lower Limit - Monopole P&S	150	US
TST1	STC Time Step - Lower Dipole	200	US
TST2	STC Time Step - Upper Dipole	200	US
TST3	STC Time Step - Monopole Stoneley	200	US
TST4	STC Time Step - Monopole P&S	50	US
TTDB	Tool String Top to DSST Bottom	24848.8	MM
TUL1	STC Time Upper Limit - Lower Dipole	15912.5	US
TUL2	STC Time Upper Limit - Upper Dipole	15525	US
TUL3	STC Time Upper Limit - Monopole Stoneley	12000	US
TUL4	STC Time Upper Limit - Monopole P&S	3660	US
TWA1	Transmitter Waveform Amplitude 1	179	
TWA2	Transmitter Waveform Amplitude 2	179	
TWA3	Transmitter Waveform Amplitude 3	166	
TWA4	Transmitter Waveform Amplitude 4	150	
TWA5	Transmitter Waveform Amplitude 5	150	
TWAX	Transmitter Waveform Amplitude X	179	
TWD1	STC Time Width - Lower Dipole	2000	US
TWD2	STC Time Width - Upper Dipole	2000	US
TWD3	STC Time Width - Monopole Stoneley	2000	US
TWD4	STC Time Width - Monopole P&S	1000	US
TWI1	STC Integration Time Window - Lower Dipole	1600	US
TWI2	STC Integration Time Window - Upper Dipole	1600	US
TWI3	STC Integration Time Window - Monopole Stoneley	2400	US
TWI4	STC Integration Time Window - Monopole P&S	500	US
TWR1	Transmitter Waveform Sample Rate 1	5	US
TWR2	Transmitter Waveform Sample Rate 2	5	US
TWR3	Transmitter Waveform Sample Rate 3	5	US
TWR4	Transmitter Waveform Sample Rate 4	5	US
TWR5	Transmitter Waveform Sample Rate 5	5	US
TWRX	Transmitter Waveform Sample Rate X	5	US
TWS1	Transmitter Waveform Select 1	0	
TWS2	Transmitter Waveform Select 2	0	
TWS3	Transmitter Waveform Select 3	4	
TWS4	Transmitter Waveform Select 4	6	
TWS5	Transmitter Waveform Select 5	6	
TWSX	Transmitter Waveform Select X	0	
UTXG	Upper Dipole Transmitter Geometry	4115	MM
WFDTSP1	SAM1 Waveform Delta for Spectrum	0	US/M
WFDTSP2	SAM2 Waveform Delta for Spectrum	0	US/M
WFDTSP3	SAM3 Waveform Delta for Spectrum	0	US/M
WFDTSP4	SAM4 Waveform Delta for Spectrum	0	US/M
WFDTSPX	SAMX Waveform Delta for Spectrum	0	US/M
WFLLSP1	SAM1 Waveform Lower Limit for Spectrum	0	US
WFLLSP2	SAM2 Waveform Lower Limit for Spectrum	0	US
WFLLSP3	SAM3 Waveform Lower Limit for Spectrum	0	US
WFLLSP4	SAM4 Waveform Lower Limit for Spectrum	0	US
WFLLSPX	SAMX Waveform Lower Limit for Spectrum	0	US
WFM1	Waveform Mode 1	W1	
WFM2	Waveform Mode 2	W1	
WFM3	Waveform Mode 3	W1	
WFM4	Waveform Mode 4	W1	
WFM5	Waveform Mode 5	W1	
WFMX	Waveform Mode X	W1	
WFULSP1	SAM1 Waveform Upper Limit for Spectrum	20000	US
WFULSP2	SAM2 Waveform Upper Limit for Spectrum	20000	US
WFULSP3	SAM3 Waveform Upper Limit for Spectrum	20000	US
WFULSP4	SAM4 Waveform Upper Limit for Spectrum	5000	US
WFULSPX	SAMX Waveform Upper Limit for Spectrum	20000	US
XMT1	Transmitter Select 1	DLO	
XMT2	Transmitter Select 2	DUP	
XMT3	Transmitter Select 3	MONO	
XMT4	Transmitter Select 4	MONO	
XMT5	Transmitter Select 5	MONO	
XMTX	Transmitter Select X	DUP	
EMS-B: Environment Measurement Sonde			
BHS	Borehole Status	OPEN	
BHT	Bottom Hole Temperature (used in calculations)	27.3	DEGC
EAAB	EMS Accelerometer Coefficient:Ab	0	
EAAS	EMS Accelerometer Coefficient:As	0	
EABB	EMS Accelerometer Coefficient:Bb	0	
EABS	EMS Accelerometer Coefficient:Bs	0	
EACB	EMS Accelerometer Coefficient:Cb	0	
EACS	EMS Accelerometer Coefficient:Cs	0	
ECOF	EMS Caliper Offset	50.8	MM
EFC	EMS Fixed Caliper Operation	OFF	
EMPDFL	EMS Max Pipe Diameter filter length	120	
EMUD	EMS Mudcake Correction	OFF	
ESCL	EMS Synthetic Caliper Log	OFF	
FCD	Future Casing (Outer) Diameter	177.8	MM
GCSE	Generalized Caliper Selection	BS	
GDEV	Average Angular Deviation of Borehole from Normal	0	DEG
GGRD	Geothermal Gradient	0.018227	DC/M
GRSE	Generalized Mud Resistivity Selection	EMS_RESIST	
GTSE	Generalized Temperature Selection	EMS_TEMP	
HVCS	Integrated Hole Volume Caliper Selection	EMS_Calipers	
ISSBAR	Barite Mud Switch	NOBARITE	
MATR	Rock Matrix for Neutron Porosity Corrections	SANDSTONE	
SHT	Surface Hole Temperature	23	DEGC
SGT-N: Scintillation Gamma Ray Tool - N			
BHS	Borehole Status	OPEN	
BHT	Bottom Hole Temperature (used in calculations)	27.3	DEGC
DPPM	Density Porosity Processing Mode	HIRS	
GCSE	Generalized Caliper Selection	BS	
GDEV	Average Angular Deviation of Borehole from Normal	0	DEG
GGRD	Geothermal Gradient	0.018227	DC/M
GRSE	Generalized Mud Resistivity Selection	EMS_RESIST	
GTSE	Generalized Temperature Selection	EMS_TEMP	
ISSBAR	Barite Mud Switch	NOBARITE	
MATR	Rock Matrix for Neutron Porosity Corrections	SANDSTONE	
SHT	Surface Hole Temperature	23	DEGC
SOGR	SGT Standoff Distance	0	MM
DIR: Directional Survey Computation			
SPED	East Departure of Starting Point	0	M
SPND	North Departure of Starting Point	0	M
SPVD	TVD of Starting Point	0	M
TAZI	Vertical Section Azimuth	0	DEG
TIED	East Departure of Tie-in Point	0	M
TIMD	Along-hole depth of Tie-in Point	348	M
TIND	North Departure of Tie-in Point	0	M
TIVD	TVD of Tie-in Point	348	M
HOLEV: Integrated Hole/Cement Volume			
FCD	Future Casing (Outer) Diameter	177.8	MM
HVCS	Integrated Hole Volume Caliper Selection	EMS_Calipers	
STI: Stuck Tool Indicator			
LBFR	Trigger for MAXIS First Reading Label	TDL	
STKT	STI Stuck Threshold	1.524	M
TDD	Total Depth - Driller	1200.00	M
TDL	Total Depth - Logger	1201.00	M
System and Miscellaneous			
ALTDPCHAN	Name of alternate depth channel	SpeedCorrectedDepth	
BS	Bit Size	222.000	MM
BSAL	Borehole Salinity	-50000.00	PPM
CSIZ	Current Casing Size	244.500	MM
CWEI	Casing Weight	53.57	KG/M
DFD	Drilling Fluid Density	1180.00	K/M3
DO	Depth Offset for Playback	0.0	M
FLEV	Fluid Level	-50000.00	M
MST	Mud Sample Temperature	20.10	DEGC
PBVSADP	Use alternate depth channel for playback	NO	
PP	Playback Processing	RECOMPUTE	
RMFS	Resistivity of Mud Filtrate Sample	0.1030	OHMM
RW	Resistivity of Connate Water	1.0000	OHMM
TD	Total Depth	1201	M
TWS	Temperature of Connate Water Sample	37.78	DEGC

Format: EMS_CAL **Vertical Scale: 1:240** **Graphics File Created: 24-Feb-2008 01:17**

OP System Version: 15C0-309

MCM

FBST-B	15C0-309	DSST-B	15C0-309
EMS-B	15C0-309	SGT-N	15C0-309
DTC-H	15C0-309		

Input DLIS Files

DEFAULT	FMI_DSI_EMS_029LUP	FN:44	PRODUCER	23-Feb-2008 22:29	1202.1 M	278.4 M

Output DLIS Files

DEFAULT	FMI_DSI_EMS_031PUP	FN:48	PRODUCER	24-Feb-2008 01:17
BACKUP	FMI_DSI_EMS_031PUP	FN:49	PRODUCER	24-Feb-2008 01:17
IMAGE	FMI_DSI_EMS_031PUP	FN:50	PRODUCER	24-Feb-2008 01:17
REDUCED	FMI_DSI_EMS_031PUP	FN:51	PRODUCER	24-Feb-2008 01:17

Calibration and Check Summary

Measurement	Nominal	Master	Before	After	Change	Limit	Units
Full-Bore Scanner - B Wellsite Calibration - Caliper Calibration							
Before: 16-Feb-2008 16:45							
Caliper 1 Small Jig	203.2	N/A	201.5	N/A	N/A	N/A	MM
Caliper 2 Small Jig	203.2	N/A	208.6	N/A	N/A	N/A	MM
Caliper 1 Large Jig	304.8	N/A	300.9	N/A	N/A	N/A	MM
Caliper 2 Large Jig	304.8	N/A	302.1	N/A	N/A	N/A	MM
Full-Bore Scanner - B Wellsite Calibration - CROUZET ACCELEROMETER PROM HAS BEEN READ CORRECTLY							
Before: 23-Feb-2008 21:08							
TEMPERATURE REFERENCE :	N/A	N/A	20	N/A	N/A	N/A	DEGC
YEAR OF CALIBRATION :	N/A	N/A	6	N/A	N/A	N/A	
MONTH OF CALIBRATION :	N/A	N/A	11	N/A	N/A	N/A	
SERIAL NUMBER :	N/A	N/A	1067	N/A	N/A	N/A	
Full-Bore Scanner - B Wellsite Calibration - CROUZET MAGNETOMETER PROM HAS BEEN READ CORRECTLY							
Before: 23-Feb-2008 21:08							
TEMPERATURE REFERENCE :	N/A	N/A	17	N/A	N/A	N/A	DEGC
YEAR OF CALIBRATION :	N/A	N/A	6	N/A	N/A	N/A	
MONTH OF CALIBRATION :	N/A	N/A	10	N/A	N/A	N/A	
SERIAL NUMBER :	N/A	N/A	751	N/A	N/A	N/A	
Environment Measurement Sonde Wellsite Calibration - EMS Caliper Calibration							
Before: 16-Feb-2008 15:25							
Radius 1 Short Radius	101.6	N/A	81.34	N/A	N/A	5.080	MM
Radius 1 Long Radius	203.2	N/A	187.4	N/A	N/A	5.080	MM
Radius 2 Short Radius	101.6	N/A	79.42	N/A	N/A	5.080	MM
Radius 2 Long Radius	203.2	N/A	184.6	N/A	N/A	5.080	MM
Radius 3 Short Radius	101.6	N/A	79.37	N/A	N/A	5.080	MM
Radius 3 Long Radius	203.2	N/A	184.5	N/A	N/A	5.080	MM
Radius 4 Short Radius	101.6	N/A	87.87	N/A	N/A	5.080	MM
Radius 4 Long Radius	203.2	N/A	190.2	N/A	N/A	5.080	MM
Radius 5 Short Radius	101.6	N/A	83.27	N/A	N/A	5.080	MM
Radius 5 Long Radius	203.2	N/A	186.9	N/A	N/A	5.080	MM
Radius 6 Short Radius	101.6	N/A	78.00	N/A	N/A	5.080	MM
Radius 6 Long Radius	203.2	N/A	183.6	N/A	N/A	5.080	MM
Scintillation Gamma Ray Tool - N Wellsite Calibration - Detector Calibration							
Before: 22-Feb-2008 14:45							
Gamma Ray (Jig - Bkg)	169.1	N/A	169.1	N/A	N/A	15.37	GAPI
Gamma Ray (Calibrated)	167.0	N/A	167.0	N/A	N/A	15.00	GAPI

Full-Bore Scanner - B / Equipment Identification

Primary Equipment:	
FullBore Scanner Sonde	FBSS - B
FullBore Scanner Sonde Upper part	FBSH - A
FullBore Scanner Sonde Cartridge	FBSC - B
GPIT Cartridge - C	GPIC - C
Insulating Sub	AH - 185
Flex Joint	AH - 184
FullBore Scanner Control Cartridge	FBCC - A
Auxiliary Equipment:	
Electronics Cartridge Housing	ECH - MRA

Full-Bore Scanner - B Wellsite Calibration

Caliper Calibration

Phase	Caliper 1 Small Jig MM	Value	Phase	Caliper 2 Small Jig MM	Value
Before		201.5	Before		208.6
172.7 (Minimum)	203.2 (Nominal)	233.7 (Maximum)	172.7 (Minimum)	203.2 (Nominal)	233.7 (Maximum)

Phase	Caliper 1 Large Jig MM	Value	Phase	Caliper 2 Large Jig MM	Value
Before		300.9	Before		302.1
259.1	304.8	350.5	259.1	304.8	350.5

(Minimum)	(Nominal)	(Maximum)	(Minimum)	(Nominal)	(Maximum)

Before: 16-Feb-2008 16:45

Environment Measurement Sonde / Equipment Identification

Primary Equipment:	
EMS Mechanical	EMM - B
EMS Cartridge	EMC - B
EMS Adaptor	EMA - B
Resistivity Meter	RES -
Auxiliary Equipment:	
Electronics Cartridge Housing	ECH - KH

Environment Measurement Sonde Wellsite Calibration

EMS Caliper Calibration

Phase	Radius 1 Short Radius MM	Value	Phase	Radius 1 Long Radius MM	Value
Before		81.34	Before		187.4
76.20 (Minimum)	101.6 (Nominal)	127.0 (Maximum)	177.8 (Minimum)	203.2 (Nominal)	228.6 (Maximum)
Phase	Radius 2 Short Radius MM	Value	Phase	Radius 2 Long Radius MM	Value
Before		79.42	Before		184.6
76.20 (Minimum)	101.6 (Nominal)	127.0 (Maximum)	177.8 (Minimum)	203.2 (Nominal)	228.6 (Maximum)
Phase	Radius 3 Short Radius MM	Value	Phase	Radius 3 Long Radius MM	Value
Before		79.37	Before		184.5
76.20 (Minimum)	101.6 (Nominal)	127.0 (Maximum)	177.8 (Minimum)	203.2 (Nominal)	228.6 (Maximum)
Phase	Radius 4 Short Radius MM	Value	Phase	Radius 4 Long Radius MM	Value
Before		87.87	Before		190.2
76.20 (Minimum)	101.6 (Nominal)	127.0 (Maximum)	177.8 (Minimum)	203.2 (Nominal)	228.6 (Maximum)
Phase	Radius 5 Short Radius MM	Value	Phase	Radius 5 Long Radius MM	Value
Before		83.27	Before		186.9
76.20 (Minimum)	101.6 (Nominal)	127.0 (Maximum)	177.8 (Minimum)	203.2 (Nominal)	228.6 (Maximum)
Phase	Radius 6 Short Radius MM	Value	Phase	Radius 6 Long Radius MM	Value
Before		78.00	Before		183.6
76.20 (Minimum)	101.6 (Nominal)	127.0 (Maximum)	177.8 (Minimum)	203.2 (Nominal)	228.6 (Maximum)

Before: 16-Feb-2008 15:25

Scintillation Gamma Ray Tool - N / Equipment Identification

Primary Equipment:	
Scintillation Gamma Cartridge	SGC - TB
Scintillation Gamma Detector	SGD - TAB
Auxiliary Equipment:	
Scintillation Gamma Housing	SGH - K
Gamma Source Radioactive	GSR - U/Y

Scintillation Gamma Ray Tool - N Wellsite Calibration

Detector Calibration

Phase	Gamma Ray Background GAPI	Value	Phase	Gamma Ray (Jig - Bkg) GAPI	Value	Phase	Gamma Ray (Calibrated) GAPI	Value
Before		10.18	Before		169.1	Before		167.0
0 (Minimum)	30.00 (Nominal)	120.0 (Maximum)	153.7 (Minimum)	169.1 (Nominal)	184.4 (Maximum)	152.0 (Minimum)	167.0 (Nominal)	182.0 (Maximum)

Before: 22-Feb-2008 14:45

DTS Telemetry Tool / Equipment Identification

Primary Equipment:		
DTC-H Auxiliary Cartridge	DTCH - A	9397
DTC-H Telemetry Cartridge	DTCH - A	9397
Auxiliary Equipment:		
DTCH Telemetry Cartridge Housing	ECH - KC	10485

Company: **PETRO-CANADA**

Schlumberger

Well: **PETRO-CANADA BLACKWATER KWIJIKA M-59**
Field: **KWIJIKA**
Province: **NORTHWEST TERRITORIES**
*****MD*****

***MD ***

ENVIRONMENTAL MEASUREMENT
BOREHOLE GRAPHICS LOG