Schlumberger

Company: APACHE CANADA LTD.
Well: APACHE PARAMOUNT LAC MAUNOIR C-34
Field: UNDEFINED
Province: NORTHWEST TERRITORIES

Province: NORTHWEST TERRITORIES
Field: UNDEFINED
Location: UWID: 300C346720125000
Well: APACHE PARAMOUNT LAC MAUNOIR C-34
Company: APACHE CANADA LTD.

CEMENT VOLUME LOG

N.E.B. COPY

LOCATION			
UWID: 300C346720125000		Elev.: K.B. 628 m	
LSD: C-34		G.L. 622.8 m	
		D.F. 627.7 m	
Permanent Datum:	GROUND LEVEL	Elev.: 622.8 m	
Log Measured From:	KELLY BUSHING	5.2 m above Perm. Datum	
Drilling Measured From:	KELLY BUSHING		
API Serial No. WID: 1995	Latitude: 67 DEG 13' 02.171"	Longitude: 125 DEG 06' 56.649"	

	Run 1	Run 2	Run 3	Run 4
Logging Date	20-Feb-2004			
Run Number	ONE			
Depth Driller	945 m			
Schlumberger Depth	945 m			
Bottom Log Interval	920.9 m			
Top Log Interval	451 m			
Casing Driller Size @ Depth	244.500 mm @ 451 m		@	
Casing Schlumberger	451 m			
Bit Size	216.000 mm			
Type Fluid In Hole	INVERT			
MUD Density / Viscosity	1100 kg/m3 / 110 s			
MUD Fluid Loss / PH				
Source Of Sample	NO SAMPLE			
RM @ Measured Temperature	@		@	
RMF @ Measured Temperature	@		@	
RMC @ Measured Temperature	@		@	
Source RMF / RMC	NO SAMPLE / NO SAMPLE			
RM @ MRT / RMF @ MRT	@ 12 / @ 12		@ / @	
Maximum Recorded Temperatures	12 degC			
Circulation Stopped / Time	20-Feb-2004 / 20:30			
Logger On Bottom / Time	21-Feb-2004 / 5:00			
Unit Number / Location	3139 / NORMAN WELLS			
Recorded By	KELLY RONCIN			
Witnessed By	TOM HEBERT			

	Run 1	Run 2	Run 3	Run 4
Logging Date				
Run Number				
Depth Driller				
Schlumberger Depth				
Bottom Log Interval				
Top Log Interval				
Casing Driller Size @ Depth		@	@	
Casing Schlumberger				
Bit Size				
Type Fluid In Hole				
MUD Density / Viscosity				
MUD Fluid Loss / PH				
Source Of Sample				
RM @ Measured Temperature		@	@	
RMF @ Measured Temperature		@	@	
RMC @ Measured Temperature		@	@	
Source RMF / RMC				
RM @ MRT / RMF @ MRT	@ /	@	@ /	@
Maximum Recorded Temperatures				
Circulation Stopped / Time				
Logger On Bottom / Time				
Unit Number / Location				
Recorded By				
Witnessed By				

DEPTH SUMMARY LISTING

Date Created: 21-FEB-2004 11:03:58

Depth System Equipment

Depth Measuring Device		Tension Device		Logging Cable	
Type:	IDW-B	Type:	CMTD-B/A	Type:	7-39P
Serial Number:	5825	Serial Number:	3139	Serial Number:	1180
Calibration Date:	10-SEP-2003	Calibration Date:	22-JAN-2004	Length:	5299.86 M
Calibrator Serial Number:	4	Calibrator Serial Number:	2000	Conveyance Method:	Wireline
Calibration Cable Type:	7-39P	Calibration Gain:	0.96	Rig Type:	LAND
Wheel Correction 1:	-2	Calibration Offset:	1175.00		
Wheel Correction 2:	-3				

Depth Control Parameters

Log Sequence: Subsequent Log In the Well

Reference Log Name: PLATFORM EXPRESS
Reference Log Run Number: ONE
Reference Log Date: 20-FEB-2004

Depth Control Remarks

1. CALIBRATED IDW WHEELS USED AS PRIMARY DEPTH CONTROL
2.
3.
4.
5.
6.

OTHER SERVICES1	OTHER SERVICES2
OS1: PEX-AIT-LDT	OS1:
OS2: OBMI-DSI-EMS-GR	OS2:
OS3: HIRES	OS3:
OS4: LOGNET	OS4:
OS5:	OS5:
REMARKS: RUN NUMBER 1	REMARKS: RUN NUMBER 2
DSI RAN CENTRALIZED USING THREE CMEZ CENTRALIZERS WITH OBMI BELOW AND EMS ABOVE	
DSI RAN USING P&S AND UPPER DIPOLE MODES.	
LOWER DIPOLE ALSO RAN FOR QUALITY ASSURANCE	
DSI TO BE RELABELED IN CALGARY	
OBMI TO BE PROCESSED FOR IMAGES AND DIPS IN CALGARY	
CVL COMPUTED USING EMS CALIPERS WITH FCD= 177.8 MM	
BUTTON 4 ON PAD D NOISY. CAN BE PROCESSED OUT IN CALGARY	
DSI THROUGH CASING SHOWS POOR COHERANCE = FREE PIPE.	
PRINTS: 1 FIELD 7 FINAL	
OPERATORS: FRANK MACEACHERN / RANDALL PROSSER / BRENT O'CONNELL	
RIG: AKITA SAHTU 51	
MAX DEV: ~0 DEGREES	

RUN 1		RUN 2	
SERVICE ORDER #:	10764787	SERVICE ORDER #:	
PROGRAM VERSION:	11C0-305	PROGRAM VERSION:	
FLUID LEVEL:		FLUID LEVEL:	

LOGGED INTERVAL	START	STOP	LOGGED INTERVAL	START	STOP

EQUIPMENT DESCRIPTION

RUN 1 | RUN 2

SURFACE EQUIPMENT

GSR-U/Y
WITM (DTS)-A

DOWNHOLE EQUIPMENT

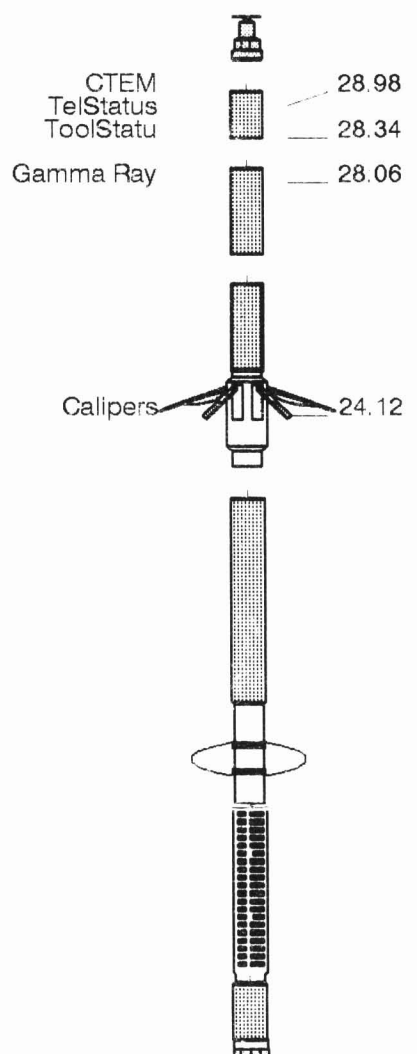

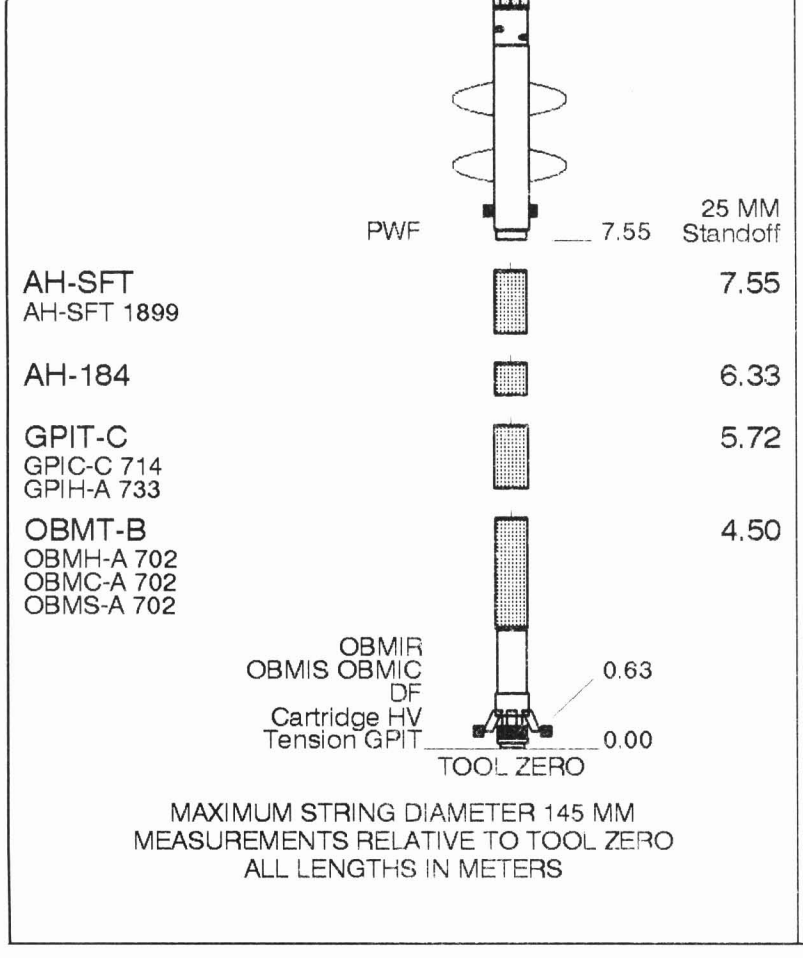

Input DLIS Files

DEFAULT	OBMI_DSI_EMS_021LUP	FN:52	PRODUCER	21-Feb-2004 09:54	949.1 M	2.0 M

Output DLIS Files

DEFAULT	OBMI_DSI_EMS_022PUP	FN:56	PRODUCER	21-Feb-2004 11:36	949.1 M	396.8 M
BACKUP	OBMI_DSI_EMS_022PUP	FN:57	PRODUCER	21-Feb-2004 11:45	949.1 M	396.8 M
NO_OBMI	OBMI_DSI_EMS_022PUP	FN:58	PRODUCER	21-Feb-2004 11:36	949.1 M	396.8 M
OBMI	OBMI_DSI_EMS_022PUP	FN:59	PRODUCER	21-Feb-2004 11:36	949.1 M	396.8 M

Integrated Hole/Cement Volume Summary

Hole Volume = 18.58 M3

Cement Volume = 6.32 M3 (assuming 177.80 MM casing O.D.)

Computed from 944.9 M to 451.1 M using data channel(s) RD1 RD2 RD3 RD4 RD5 RD6

OP System Version: 11C0-305

MCM

OBMT-B	11C0-305	GPIT-C	11C0-305
DSST-B	OP11-KP1	EMS-B	11C0-305
SGT-N	11C0-305	DTC-H	11C0-305

PIP SUMMARY

- Integrated Hole Volume Minor Pip Every 0.1 M3
- Integrated Hole Volume Major Pip Every 1 M3
- Integrated Cement Volume Minor Pip Every 0.1 M3
- Integrated Cement Volume Major Pip Every 1 M3

Time Mark Every 60 S

	Formation Between LHT2 and HDMI_1	Formation Between HDMX_1 and RHT3
	Washout From HDMI_1 to BS2	Washout From BS3 to HDMX_1
	Tight Spot From BS2 to HDMI_1	Tight Spot From HDMX_1 to BS3
Tension (TENS) 25000 (N) 0	Annulus From BS2 to FCD2	Annulus From FCD3 to BS3
Hole Diameter Maximum (HDMX) 125 (MM) 375	Future Casing	
Hole Diameter Minimum (HDMI) 125 (MM) 375	Hole Diameter Minimum (HDMI) 600 (MM) 100	Hole Diameter Maximum (HDMX) 100 (MM) 600
Gamma Ray (GR) 0 (GAPI) 150	FCD2 (FCD) 600 (MM) 100	FCD3 (FCD) 100 (MM) 600
Bit Size (BS) 125 (MM) 375	Bit Size (BS) 600 (MM) 100	Bit Size (BS) 100 (MM) 600

*** CEMENT VOLUME LOG ***

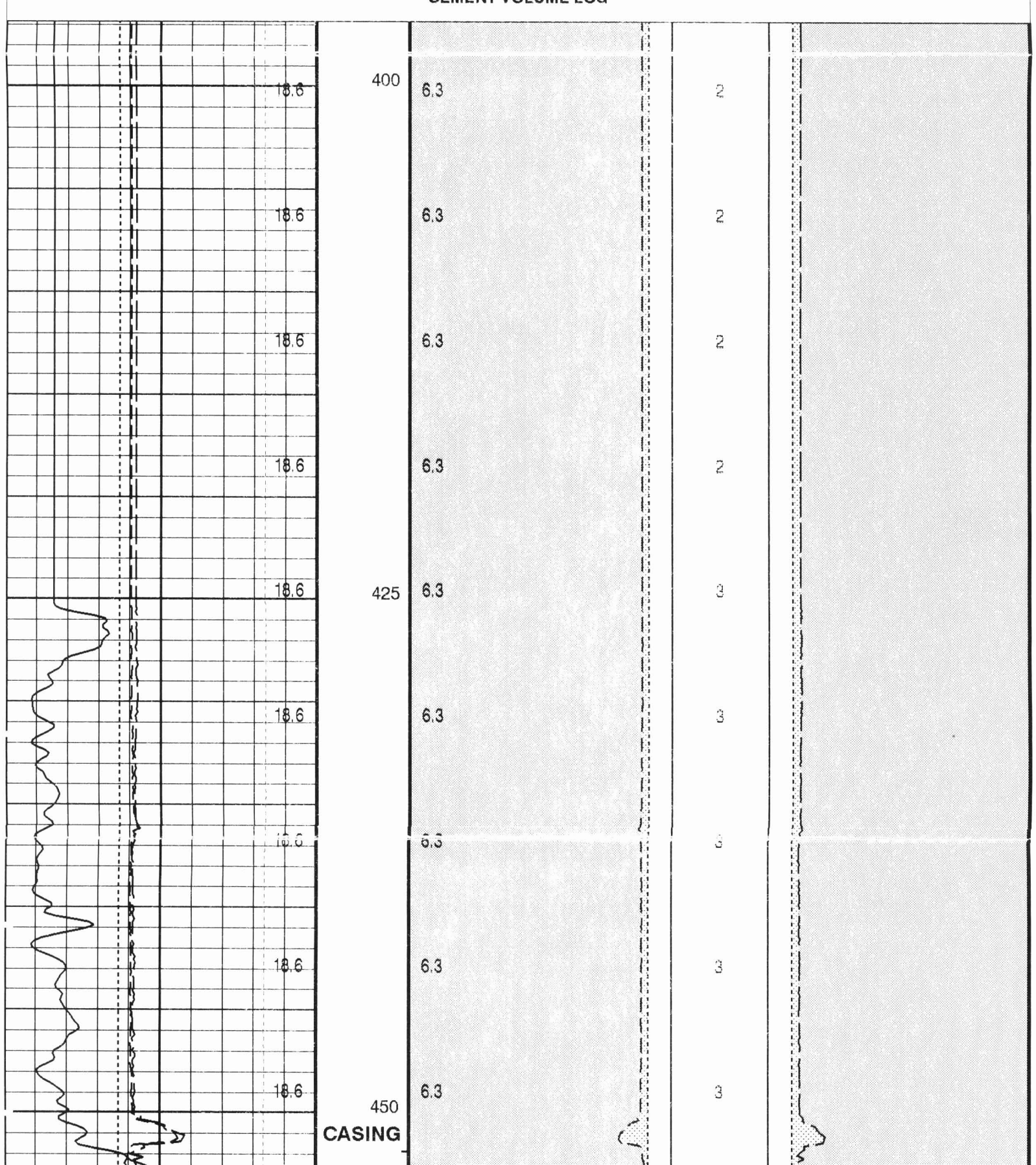

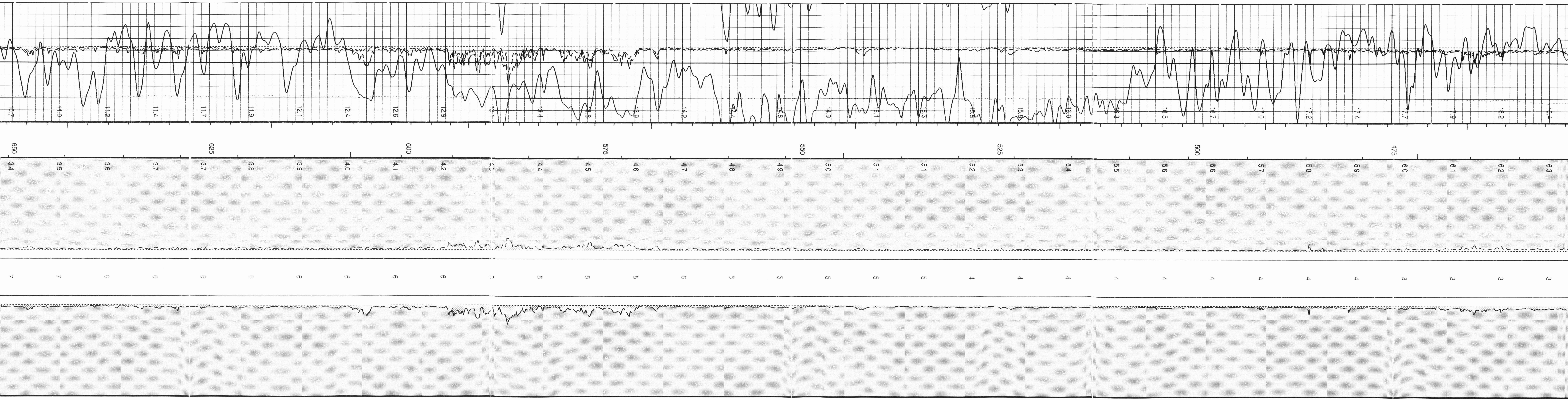

10.5
10.2
10.0
9.8
9.5
9.3
9.1
8.8
8.6
8.3
8.1
7.9
7.6
7.4
7.2
6.9
6.7
6.5
6.2
6.0
5.8
5.5
5.3
5.1
4.8
4.6
4.3
4.1
3.9
3.6
3.4
3.2
675
700
725
750
775
800
825
850
3.3
3.2
3.1
3.1
3.0
2.9
2.8
2.7
2.6
2.5
2.5
2.4
2.3
2.2
2.1
2.0
2.0
1.9
1.8
1.7
1.6
1.6
1.5
1.4
1.3
1.2
1.1
1.0
0.9
0.9
0.8
0.7
7
7
7
7
7
7
7
8
8
8
8
8
8
8
8
8
8
9
9
9
9
9
9
9
9
9
10
10
10
10
10
10

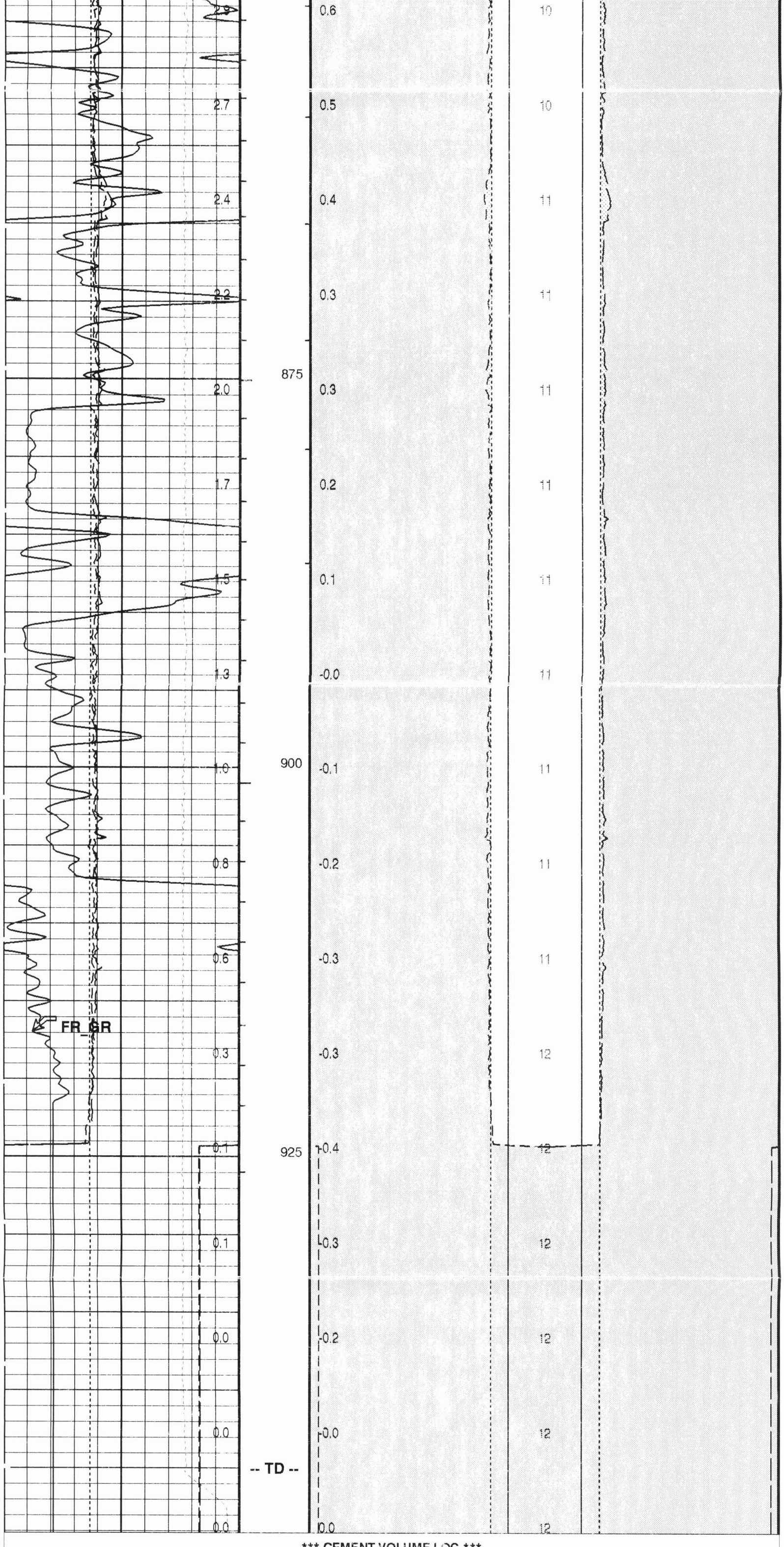

*** CEMENT VOLUME LOG ***

Bit Size (BS)	125 (MM) 375	
Gamma Ray (GR)	0 (GAPI) 150	
Hole Diameter Minimum (HDMI)	125 (MM) 375	
Hole Diameter Maximum (HDMX)	125 (MM) 375	
Tension (TENS)	25000 (N) 0	
Bit Size (BS)	600 (MM) 100	100 (MM) 600
FCD2 (FCD)	600 (MM) 100	FCD3 (FCD) 100 (MM) 600
Hole Diameter Minimum (HDMI)	600 (MM) 100	Hole Diameter Maximum (HDMX) 100 (MM) 600
Future Casing		
Annulus From BS2 to FCD2		Annulus From FCD3 to BS3
Tight Spot From BS2 to HDMI_1		Tight Spot From HDMX_1 to BS3
Washout From HDMI_1 to BS2		Washout From BS3 to HDMX_1
Formation Between LHT2 and HDMI_1		Formation Between HDMX_1 and RHT3

PIP SUMMARY

- Integrated Hole Volume Minor Pip Every 0.1 M3
- Integrated Hole Volume Major Pip Every 1 M3
- Integrated Cement Volume Minor Pip Every 0.1 M3
- Integrated Cement Volume Major Pip Every 1 M3

Time Mark Every 60 S

Parameters

DLIS Name	Description	Value	
	DSST-B: Dipole Shear Imager - B		
BHT	Bottom Hole Temperature (used in calculations)	12	DEGC
GGRD	Geothermal Gradient	0.018227	DC/M
GTSE	Generalized Temperature Selection	GRADIENT_FROM_BOTTOM	
SHT	Surface Hole Temperature	20	DEGC
	EMS-B: Environment Measurement Sonde		
ECOF	EMS Caliper Offset	50.8	MM
EFC	EMS Fixed Caliper Operation	OFF	
FCD	Future Casing (Outer) Diameter	177.8	MM
HVCS	Integrated Hole Volume Caliper Selection	EMS_Calipers	
	SGT-N: Scintillation Gamma-Ray - N		
BHT	Bottom Hole Temperature (used in calculations)	12	DEGC
GGRD	Geothermal Gradient	0.018227	DC/M
GTSE	Generalized Temperature Selection	GRADIENT_FROM_BOTTOM	
SHT	Surface Hole Temperature	20	DEGC
	HOLEV: Integrated Hole/Cement Volume		
BHT	Bottom Hole Temperature (used in calculations)	12	DEGC
FCD	Future Casing (Outer) Diameter	177.8	MM
GGRD	Geothermal Gradient	0.018227	DC/M
GTSE	Generalized Temperature Selection	GRADIENT_FROM_BOTTOM	
HVCS	Integrated Hole Volume Caliper Selection	EMS_Calipers	
SHT	Surface Hole Temperature	20	DEGC
	STI: Stuck Tool Indicator		
LBFR	Trigger for MAXIS First Reading Label	TDL	
TDD	Total Depth - Driller	945.00	M
TDL	Total Depth - Logger	945.00	M
	DIR: Directional Survey Computation		
SPVD	TVD of Starting Point	0	M
TIMD	Along-hole depth of Tie-in Point	0	M
TIVD	TVD of Tie-in Point	0	M
	System and Miscellaneous		
BS	Bit Size	216.000	MM
DO	Depth Offset for Playback	0.0	M
PP	Playback Processing	NORMAL	
TD	Total Depth	945	M

Format: CVL Vertical Scale: 1:240 Graphics File Created: 21-Feb-2004 11:36

OP System Version: 11C0-305

MCM

OBMT-B	11C0-305	GPIT-C	11C0-305
DSST-B	OP11-KP1	EMS-B	11C0-305
SGT-N	11C0-305	DTC-H	11C0-305

Input DLIS Files

DEFAULT	OBMI_DSI_EMS_021LUP	FN:52	PRODUCER	21-Feb-2004 09:54	949.1 M	2.0 M

Output DLIS Files

DEFAULT	OBMI_DSI_EMS_022PUP	FN:56	PRODUCER	21-Feb-2004 11:36	
BACKUP	OBMI_DSI_EMS_022PUP	FN:57	PRODUCER	21-Feb-2004 11:45	
NO_OBMI	OBMI_DSI_EMS_022PUP	FN:58	PRODUCER	21-Feb-2004 11:36	
OBMI	OBMI_DSI_EMS_022PUP	FN:59	PRODUCER	21-Feb-2004 11:36	

Input DLIS Files

DEFAULT	OBMI_DSI_EMS_021LUP	FN:52	PRODUCER	21-Feb-2004 09:54	949.1 M	2.0 M

Output DLIS Files

DEFAULT	OBMI_DSI_EMS_022PUP	FN:56	PRODUCER	21-Feb-2004 11:36	949.1 M	396.8 M
BACKUP	OBMI_DSI_EMS_022PUP	FN:57	PRODUCER	21-Feb-2004 11:45	949.1 M	396.8 M
NO_OBMI	OBMI_DSI_EMS_022PUP	FN:58	PRODUCER	21-Feb-2004 11:36	949.1 M	396.8 M
OBMI	OBMI_DSI_EMS_022PUP	FN:59	PRODUCER	21-Feb-2004 11:36	949.1 M	396.8 M

Integrated Hole/Cement Volume Summary

Hole Volume = 18.58 M3

Cement Volume = 6.32 M3 (assuming 177.80 MM casing O.D.)

Computed from 944.9 M to 451.1 M using data channel(s) RD1 RD2 RD3 RD4 RD5 RD6

OP System Version: 11C0-305

MCM

OBMT-B	11C0-305	GPIT-C	11C0-305
DSST-B	OP11-KP1	EMS-B	11C0-305
SGT-N	11C0-305	DTC-H	11C0-305

PIP SUMMARY

Integrated Hole Volume Minor Pip Every 0.1 M3
Integrated Hole Volume Major Pip Every 1 M3
Integrated Cement Volume Minor Pip Every 0.1 M3
Integrated Cement Volume Major Pip Every 1 M3
Integrated Transit Time Minor Pip Every 1 MS
Integrated Transit Time Major Pip Every 10 MS

Time Mark Every 60 S

Standard deviation for HDAR From OSDV to D4T			
Probability Angle for HDMI (CHAM) (DEG) 90 240			
Probability angle for HDMI From D4T to CHAM			
Fixed caliper flag From D4T to EFCF			
Oval Standard Deviation (OSDV) 23 () 3	Tension (TENS) 20000 (N) 0		Formation From F3 to HDMX_1 / Formation From HDMX_2 to F4
Tool/Tot. Drag From D4T to STIA	Hole Diameter 1 (HD1) 125 (MM) 375		HD difference From HDMX_1 to HDMI_1 / HD difference From HDMI_2 to HDMX_2
Cable Drag From D4T to STIT	Hole Diameter from Area (HDAR) 125 (MM) 375		Hole Diameter Minimum (HDMI) 500 (MM) 0 / Hole Diameter Minimum (HDMI) 0 (MM) 500
Stuck Stretch (STIT) 0 (M) 20	Gamma Ray (GR) 0 (GAPI) 150		Hole Diameter Maximum (HDMX) 500 (MM) 0 / Hole Diameter Maximum (HDMX) 0 (MM) 500
EMS Fixed Caliper Flag (EFCF) 0 () 20	Bit Size (BS) 125 (MM) 375	Deviation (DEVI) 0 (DEG) 50	Bit Size (BS) 500 (MM) 0 / Bit Size (BS) 0 (MM) 500

MAIN PASS: *** ENVIRONMENTAL MEASUREMENT ***

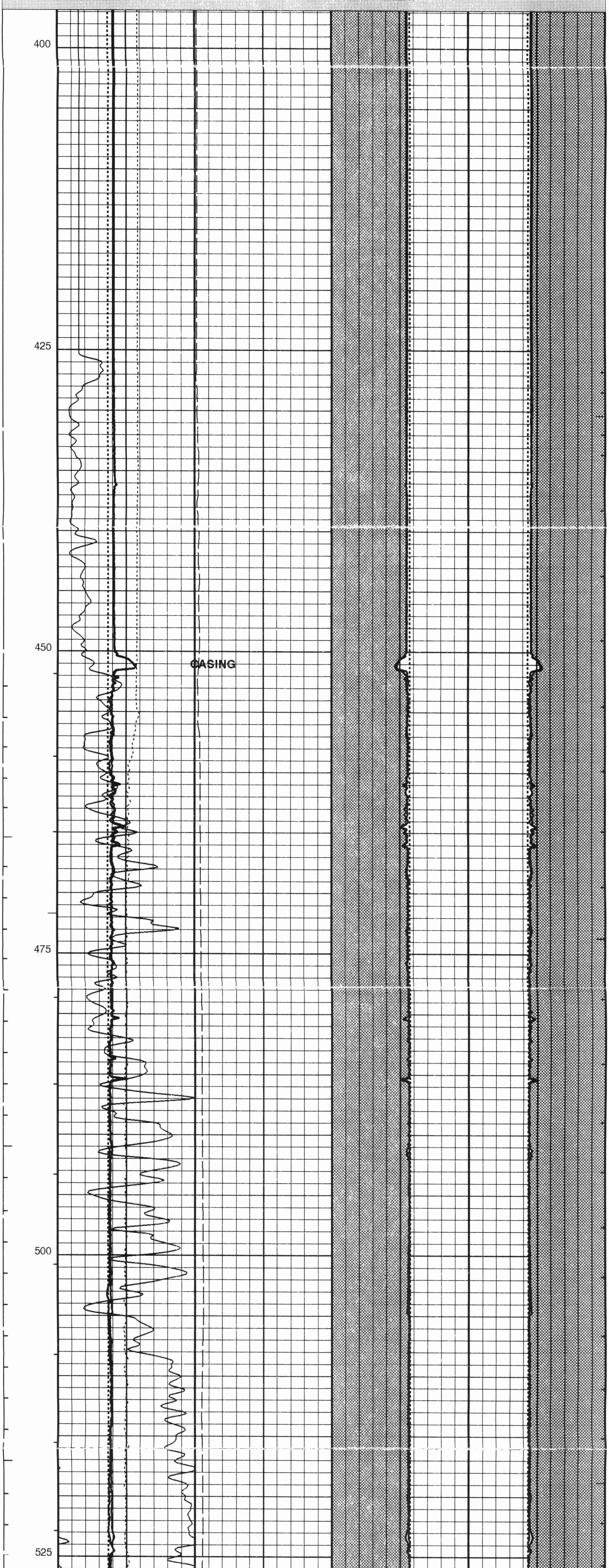

550
575
600
625
650
675
700
725

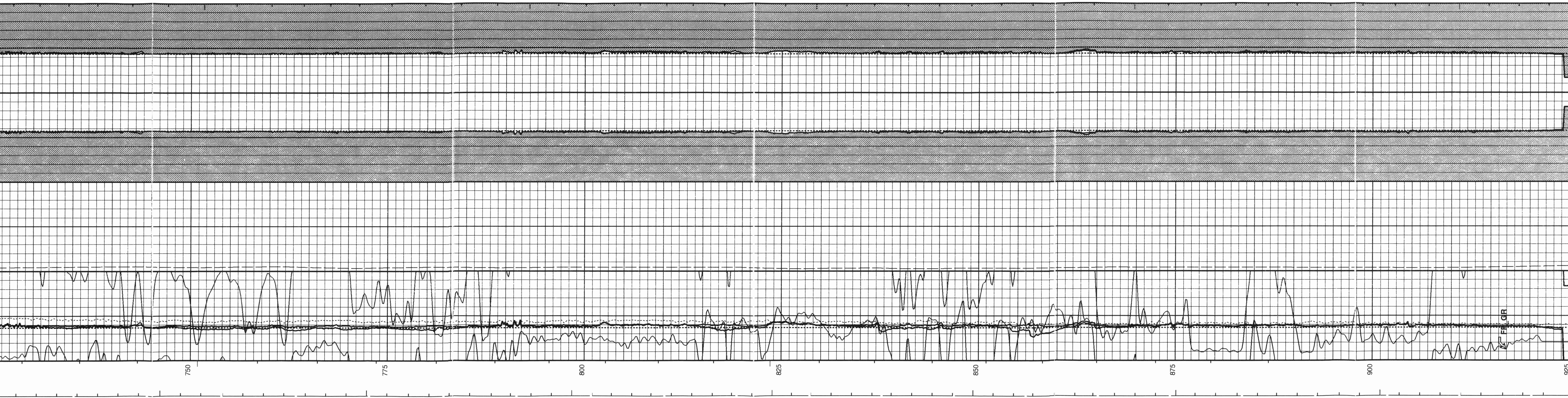
750
775
800
825
850
875
900
925
FR GR

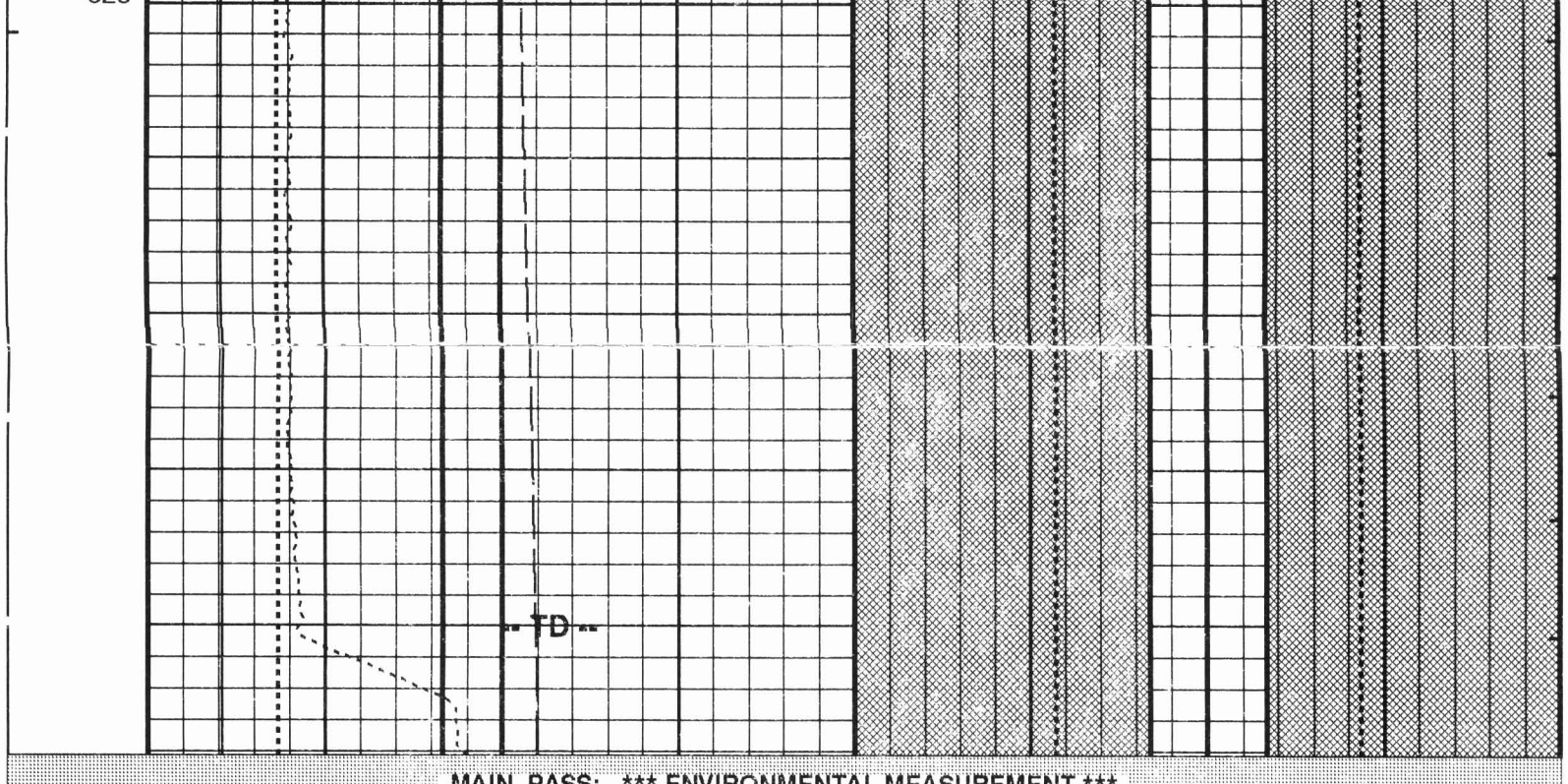

MAIN PASS: *** ENVIRONMENTAL MEASUREMENT ***

EMS Fixed Caliper Flag (EFCF) 0 () 20	Bit Size (BS) 125 (MM) 375	Deviation (DEVI) 0 (DEG) 50	Bit Size (BS) 500 (MM) 0 / Bit Size (BS) 0 (MM) 500
Stuck Stretch (STIT) 0 (M) 20	Gamma Ray (GR) 0 (GAPI) 150		Hole Diameter Maximum (HDMX) 500 (MM) 0 / Hole Diameter Maximum (HDMX) 0 (MM) 500
Cable Drag From D4T to STIT	Hole Diameter from Area (HDAR) 125 (MM) 375		Hole Diameter Minimum (HDMI) 500 (MM) 0 / Hole Diameter Minimum (HDMI) 0 (MM) 500
Tool/Tot. Drag From D4T to STIA	Hole Diameter 1 (HD1) 125 (MM) 375		HD difference From HDMX_1 to HDMI_1 / HD difference From HDMI_2 to HDMX_2
Oval Standard Deviation (OSDV) 23 () 3	Tension (TENS) 20000 (N) 0		Formation From F3 to HDMX_1 / Formation From HDMX_2 to F4
Fixed caliper flag From D4T to EFCF			
Probability angle for HDMI From D4T to CHAM			
Probability Angle for HDMI (CHAM) (DEG) 90 240			
Standard deviation for HDAR From OSDV to D4T			

PIP SUMMARY

- Integrated Hole Volume Minor Pip Every 0.1 M3
- Integrated Hole Volume Major Pip Every 1 M3
- Integrated Cement Volume Minor Pip Every 0.1 M3
- Integrated Cement Volume Major Pip Every 1 M3
- Integrated Transit Time Minor Pip Every 1 MS
- Integrated Transit Time Major Pip Every 10 MS
- Time Mark Every 60 S

Parameters

DLIS Name	Description	Value	
	OBMT-B: Oil Base Mud Formation Imager Tool B		
SOFF	OBMT Standoff Fin Size	25	MM
	DSST-B: Dipole Shear Imager - B		
ITTS	Integrated Transit Time Source	DTCO	
	EMS-B: Environment Measurement Sonde		
ECOF	EMS Caliper Offset	50.8	MM
EFC	EMS Fixed Caliper Operation	OFF	
ESCL	EMS Synthetic Caliper Log	OFF	
FCD	Future Casing (Outer) Diameter	177.8	MM
HVCS	Integrated Hole Volume Caliper Selection	EMS_Calipers	
	HOLEV: Integrated Hole/Cement Volume		
FCD	Future Casing (Outer) Diameter	177.8	MM
HVCS	Integrated Hole Volume Caliper Selection	EMS_Calipers	
	STI: Stuck Tool Indicator		
LBFR	Trigger for MAXIS First Reading Label	TDL	
STKT	STI Stuck Threshold	1.5	M
TDD	Total Depth - Driller	945.00	M
TDL	Total Depth - Logger	945.00	M
	DIR: Directional Survey Computation		
SPVD	TVD of Starting Point	0	M
TIMD	Along-hole depth of Tie-in Point	0	M
TIVD	TVD of Tie-in Point	0	M
	System and Miscellaneous		
BS	Bit Size	216.000	MM
DO	Depth Offset for Playback	0.0	M
PP	Playback Processing	NORMAL	
TD	Total Depth	945	M

Format: EMS_HoleDiameter Vertical Scale: 1:240 Graphics File Created: 21-Feb-2004 11:36

OP System Version: 11C0-305

MCM

OBMT-B	11C0-305	GPIT-C	11C0-305
DSST-B	OP11-KP1	EMS-B	11C0-305
SGT-N	11C0-305	DTC-H	11C0-305

Input DLIS Files

DEFAULT	OBMI_DSI_EMS_021LUP	FN:52	PRODUCER	21-Feb-2004 09:54	949.1 M	2.0 M

Output DLIS Files

DEFAULT	OBMI_DSI_EMS_022PUP	FN:56	PRODUCER	21-Feb-2004 11:36	
BACKUP	OBMI_DSI_EMS_022PUP	FN:57	PRODUCER	21-Feb-2004 11:45	
NO_OBMI	OBMI_DSI_EMS_022PUP	FN:58	PRODUCER	21-Feb-2004 11:36	
OBMI	OBMI_DSI_EMS_022PUP	FN:59	PRODUCER	21-Feb-2004 11:36	

Input DLIS Files

DEFAULT	OBMI_DSI_EMS_021LUP	FN:52	PRODUCER	21-Feb-2004 09:54	949.1 M	2.0 M

Output DLIS Files

DEFAULT	OBMI_DSI_EMS_022PUP	FN:56	PRODUCER	21-Feb-2004 11:36	949.1 M	396.8 M
BACKUP	OBMI_DSI_EMS_022PUP	FN:57	PRODUCER	21-Feb-2004 11:45	949.1 M	396.8 M
NO_OBMI	OBMI_DSI_EMS_022PUP	FN:58	PRODUCER	21-Feb-2004 11:36	949.1 M	396.8 M
OBMI	OBMI_DSI_EMS_022PUP	FN:59	PRODUCER	21-Feb-2004 11:36	949.1 M	396.8 M

Integrated Hole/Cement Volume Summary

Hole Volume = 18.58 M3

Cement Volume = 6.32 M3 (assuming 177.80 MM casing O.D.)

Computed from 944.9 M to 451.1 M using data channel(s) RD1 RD2 RD3 RD4 RD5 RD6

OP System Version: 11C0-305

MCM

OBMT-B	11C0-305	GPIT-C	11C0-305
DSST-B	OP11-KP1	EMS-B	11C0-305
SGT-N	11C0-305	DTC-H	11C0-305

PIP SUMMARY

- Integrated Hole Volume Minor Pip Every 0.1 M3
- Integrated Hole Volume Major Pip Every 1 M3
- Integrated Cement Volume Minor Pip Every 0.1 M3
- Integrated Cement Volume Major Pip Every 1 M3
- Integrated Transit Time Minor Pip Every 1 MS
- Integrated Transit Time Major Pip Every 10 MS
- Time Mark Every 60 S

Standard deviation for HDAR From OSDV to D4T				
Probability Angle for HDMI (CHAM) (DEG) 90 240				
Probability angle for HDMI From D4T to CHAM				
Fixed caliper flag From D4T to EFCF		Formation From HDMX to F2		
Oval Standard Deviation (OSDV) 23 () 3	Tension (TENS) 20000 (N) 0	HD difference From HDMI to HDMX	Formation From RD4 to RHT2	Formation From RD5 to LHT3 / Formation From RHT3 to RD6
Tool/Tot. Drag From D4T to STIA	Hole Diameter from Area (HDAR) 125 (MM) 375	Hole Diameter from Area (HDAR) 125 (MM) 375	Formation From RHT2 to RD1	Formation From LHT3 to RD2 / Formation From RD3 to RHT3

Cable Drag From D4T to STIT	Hole Diameter 1 (HD1) 125 (MM) 375	Hole Diameter Minimum (HDMI) 125 (MM) 375	Radius 4 (RD4) -250 (MM) 250	Radius 5 (RD5) -250 (MM) 250	Radius 6 (RD6) 250 (MM) -250
Stuck Stretch (STIT) 0 (M) 20	Gamma Ray (GR) 0 (GAPI) 150	Hole Diameter Maximum (HDMX) 125 (MM) 375	Radius 1 (RD1) 250 (MM) -250	Radius 2 (RD2) 250 (MM) -250	Radius 3 (RD3) -250 (MM) 250
EMS Fixed Caliper Flag (EFCF) 0 () 20	Bit Size (BS) 125 (MM) 375	Bit Size (BS) 125 (MM) 375	EMS Tool Center (ETC1) 250 (MM) -250	EMS Tool Center (ETC2) 250 (MM) -250	EMS Tool Center (ETC3) 250 (MM) -250

MAIN PASS: *** ENVIRONMENTAL MEASUREMENT ***

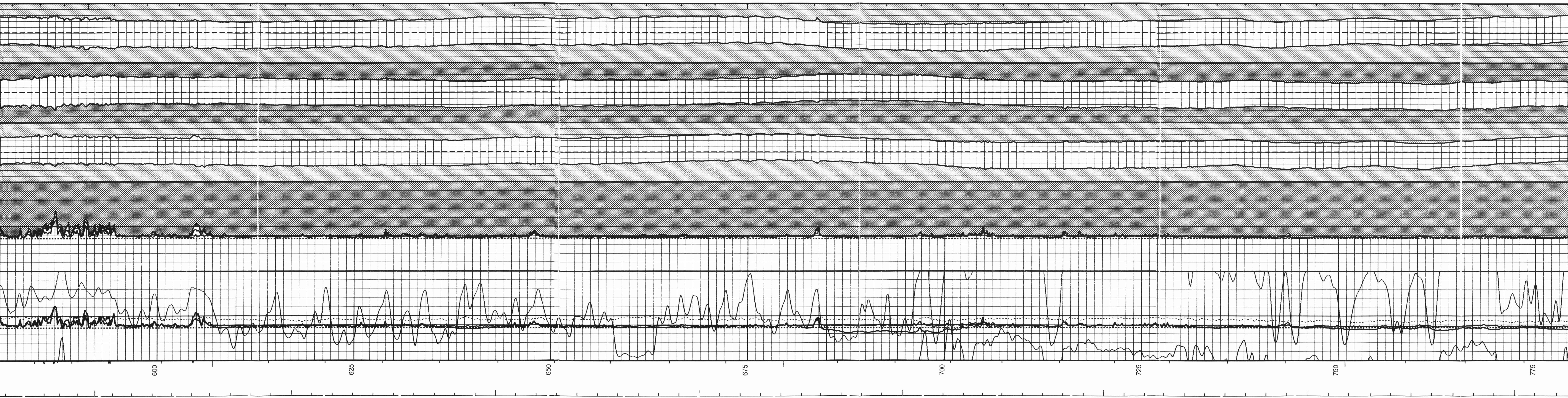
600
625
650
675
700
725
750
775

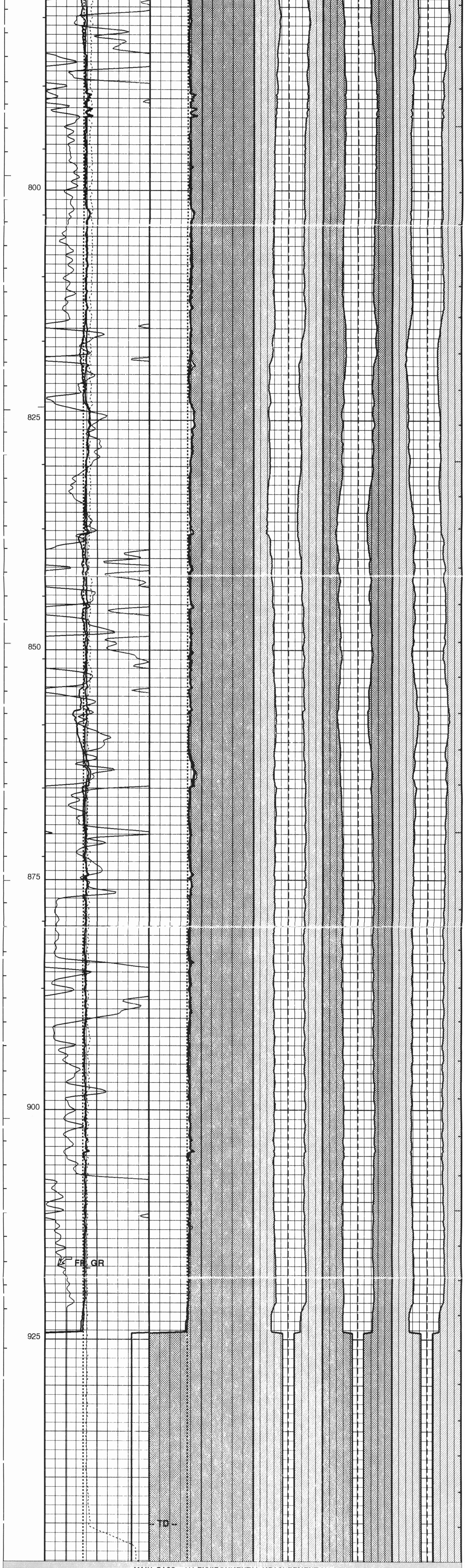

MAIN PASS: *** ENVIRONMENTAL MEASUREMENT ***

EMS Fixed Caliper Flag (EFCF) 0 () 20	Bit Size (BS) 125 (MM) 375	Bit Size (BS) 125 (MM) 375	EMS Tool Center (ETC1) 250 (MM) -250	EMS Tool Center (ETC2) 250 (MM) -250	EMS Tool Center (ETC3) 250 (MM) -250
Stuck Stretch (STIT) 0 (M) 20	Gamma Ray (GR) 0 (GAPI) 150	Hole Diameter Maximum (HDMX) 125 (MM) 375	Radius 1 (RD1) 250 (MM) -250	Radius 2 (RD2) 250 (MM) -250	Radius 3 (RD3) -250 (MM) 250
Cable Drag From D4T to STIT	Hole Diameter 1 (HD1) 125 (MM) 375	Hole Diameter Minimum (HDMI) 125 (MM) 375	Radius 4 (RD4) -250 (MM) 250	Radius 5 (RD5) -250 (MM) 250	Radius 6 (RD6) 250 (MM) -250
Tool/Tot. Drag From D4T to STIA	Hole Diameter from Area (HDAR) 125 (MM) 375	Hole Diameter from Area (HDAR) 125 (MM) 375	Formation From RHT2 to RD1	Formation From LHT3 to RD2	Formation From RD3 to RHT3
Oval Standard Deviation (OSDV) 23 () 3	Tension (TENS) 20000 (N) 0	HD difference From HDMI to HDMX	Formation From RD4 to RHT2	Formation From RD5 to LHT3	Formation From RHT3 to RD6
Fixed caliper		Formation			

flag From D4T to EFCF	
Probability angle for HDMI From D4T to CHAM	
Probability Angle for HDMI (CHAM) (DEG)	90 240
Standard deviation for HDAR From OSDV to D4T	

PIP SUMMARY

- Integrated Hole Volume Minor Pip Every 0.1 M3
- Integrated Hole Volume Major Pip Every 1 M3
- Integrated Cement Volume Minor Pip Every 0.1 M3
- Integrated Cement Volume Major Pip Every 1 M3
- Integrated Transit Time Minor Pip Every 1 MS
- Integrated Transit Time Major Pip Every 10 MS
- Time Mark Every 60 S

Parameters

DLIS Name	Description	Value	
	DSST-B: Dipole Shear Imager - B		
ITTS	Integrated Transit Time Source	DTCO	
	EMS-B: Environment Measurement Sonde		
ECOF	EMS Caliper Offset	50.8	MM
EFC	EMS Fixed Caliper Operation	OFF	
ESCL	EMS Synthetic Caliper Log	OFF	
FCD	Future Casing (Outer) Diameter	177.8	MM
HVCS	Integrated Hole Volume Caliper Selection	EMS_Calipers	
	HOLEV: Integrated Hole/Cement Volume		
FCD	Future Casing (Outer) Diameter	177.8	MM
HVCS	Integrated Hole Volume Caliper Selection	EMS_Calipers	
	STI: Stuck Tool Indicator		
LBFR	Trigger for MAXIS First Reading Label	TDL	
STKT	STI Stuck Threshold	1.5	M
TDD	Total Depth - Driller	945.00	M
TDL	Total Depth - Logger	945.00	M
	DIR: Directional Survey Computation		
SPVD	TVD of Starting Point	0	M
TIMD	Along-hole depth of Tie-in Point	0	M
TIVD	TVD of Tie-in Point	0	M
	System and Miscellaneous		
BS	Bit Size	216.000	MM
DO	Depth Offset for Playback	0.0	M
PP	Playback Processing	NORMAL	
TD	Total Depth	945	M

Format: EMS_Caliper1 Vertical Scale: 1:240 Graphics File Created: 21-Feb-2004 11:36

OP System Version: 11C0-305

MCM

OBMT-B	11C0-305	GPIT-C	11C0-305
DSST-B	OP11-KP1	EMS-B	11C0-305
SGT-N	11C0-305	DTC-H	11C0-305

Input DLIS Files

DEFAULT	OBMI_DSI_EMS_021LUP	FN:52	PRODUCER	21-Feb-2004 09:54	949.1 M	2.0 M

Output DLIS Files

DEFAULT	OBMI_DSI_EMS_022PUP	FN:56	PRODUCER	21-Feb-2004 11:36
BACKUP	OBMI_DSI_EMS_022PUP	FN:57	PRODUCER	21-Feb-2004 11:45
NO_OBMI	OBMI_DSI_EMS_022PUP	FN:58	PRODUCER	21-Feb-2004 11:36
OBMI	OBMI_DSI_EMS_022PUP	FN:59	PRODUCER	21-Feb-2004 11:36

Graphics File Name: BORE_GRAPHIC_3.PDS Graphics File Created: 21-Feb-2004 11:36

Borehole Cross Section

Parameters

DLIS Name	Description	Value
BGVS	Borehole Graphic Vertical Scale	D200_Metric
BGDI	Borehole Graphic Depth Interval	25_M
BGDM	Borehole Graphic Display Mode	Xsec_Tool_CalAll_Data
BGHW	Borehole Graphic Horizontal Width	300_MM
BGAI	Borehole Graphic Angle Index	Orient_from_Projected_North
BGUN	Borehole Graphic Unit	METRIC

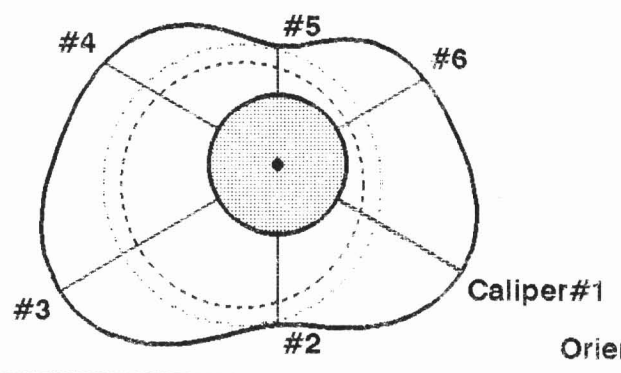

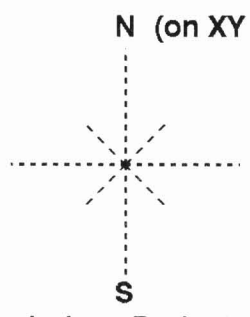

Orientation Index : Projected North

Depth (M)	Future Casing Diameter (FCD) -150.0 (MM) 150.0 / Bit Size (BS) -150.0 (MM) 150.0	Borehole Data: DIA. Max (MM)	DIA. Min (MM)	Conf. Factor (DEG)	Orient Angle (DEG)
445.0	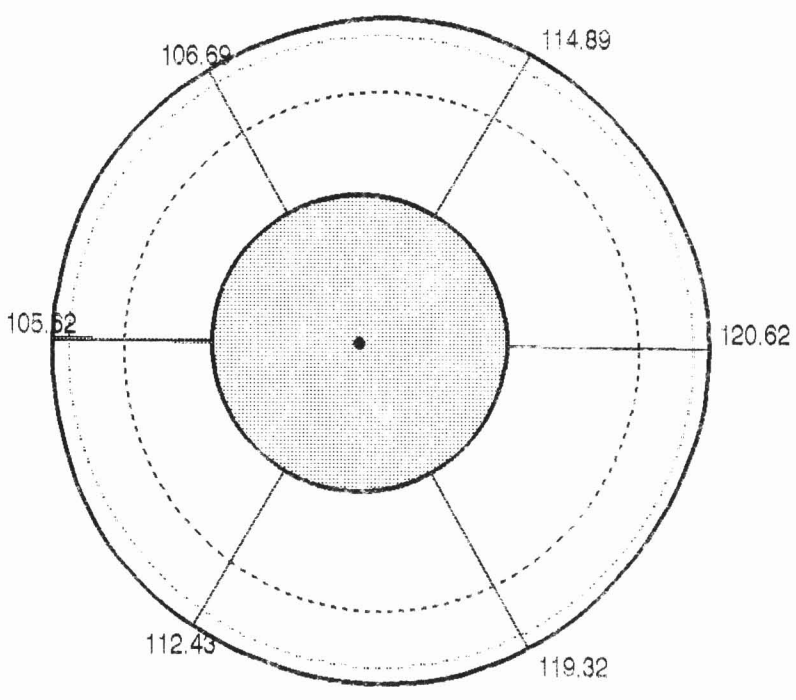	227.3	226.2	64.1	270.9
470.0	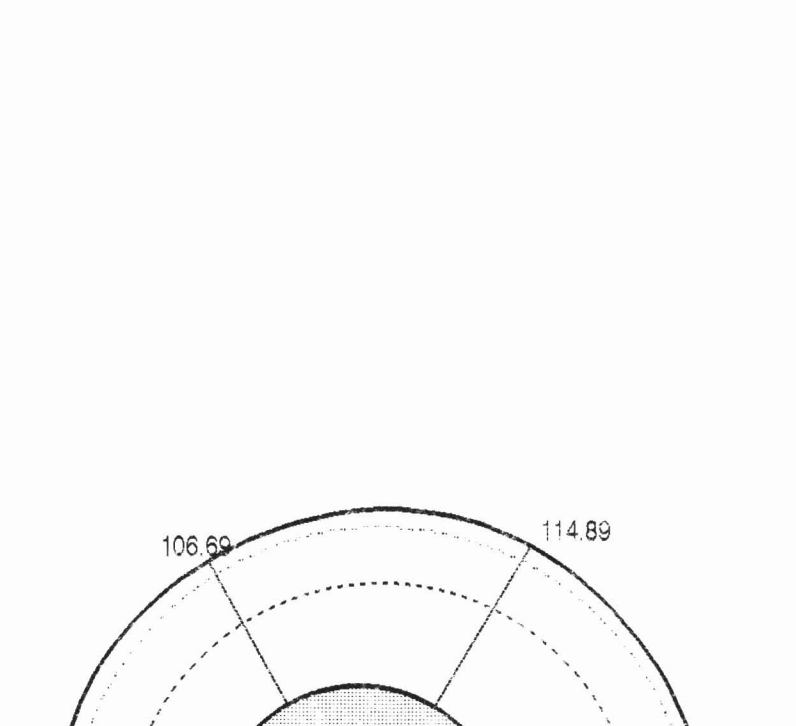	224.2	222.0	70.2	259.3

450

475

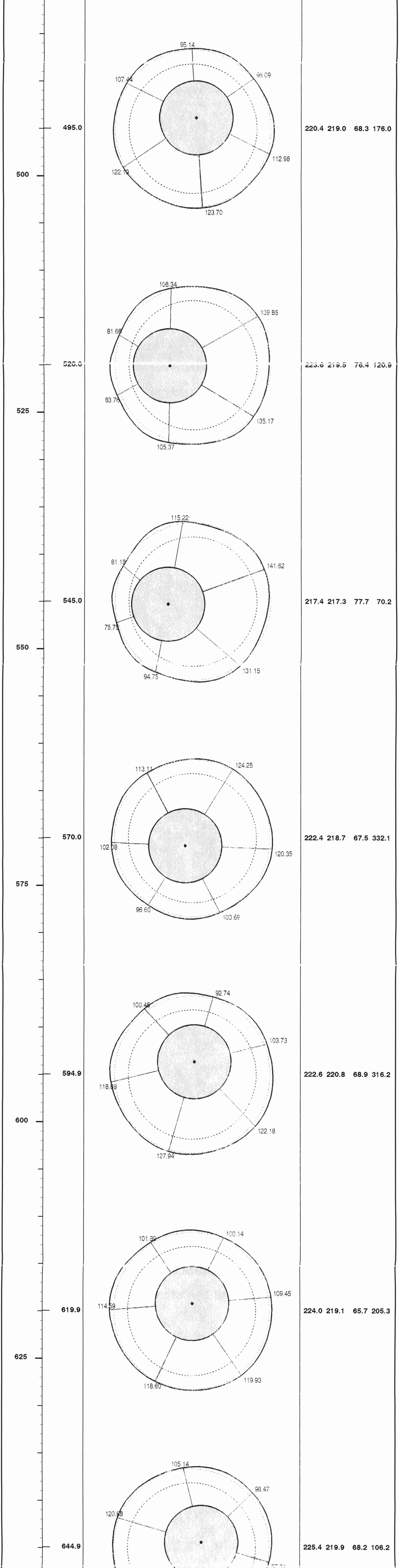
500
525
550
575
600
625
495.0
520.0
545.0
570.0
594.9
619.9
644.9
95.14
96.09
107.44
112.98
122.19
123.70
220.4 219.0 68.3 176.0
106.34
139.85
81.66
83.76
135.17
105.37
223.6 219.5 76.4 120.9
115.22
81.18
141.62
75.75
94.75
131.15
217.4 217.3 77.7 70.2
124.25
113.11
102.08
120.35
96.60
103.69
222.4 218.7 67.5 332.1
92.74
100.46
103.73
118.88
122.18
127.94
222.6 220.8 68.9 316.2
100.14
101.89
109.45
114.59
119.93
118.60
224.0 219.1 65.7 205.3
105.14
96.47
120.68
97.01
225.4 219.9 68.2 106.2

650

126.96

112.88

675

669.9

75.51

98.08

83.77

133.14

221.9 219.8 78.4 339.4

109.84

142.67

694.9

75.39

72.60

103.29

100.36

220.2 220.2 81.6 253.9

700

144.73

143.29

719.9

92.63

83.40

124.64

91.40

224.5 221.0 73.9 147.3

725

122.82

141.07

744.9

116.65

138.25

86.38

216.4 216.4 75.5 45.7

750

127.10

77.76

94.46

769.9

135.92

139.93

101.81

222.3 221.0 76.9 293.8

775

109.34

82.41

83.86

794.9

114.95

126.94

100.45

222.0 220.4 67.9 176.3

800

95.03

119.69

103.40

148.03

Depth (M)		Borehole Data			
819.9	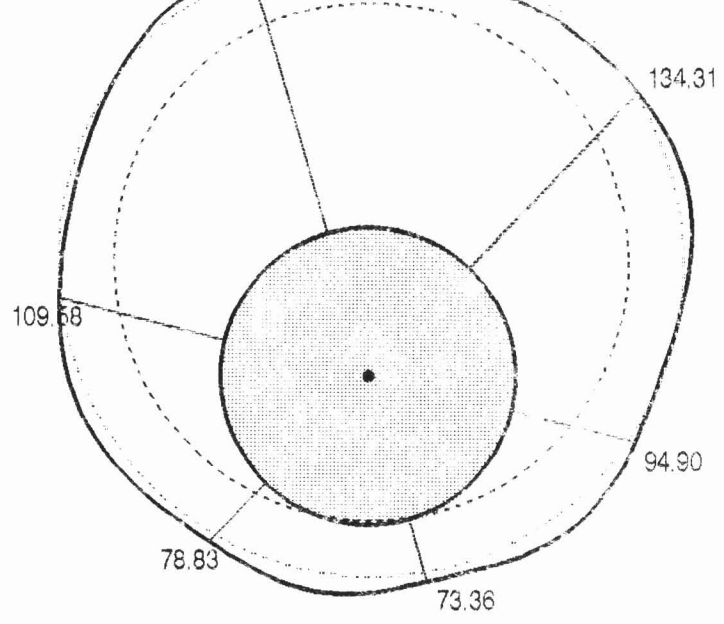	221.4	217.5	79.4	43.8
844.9	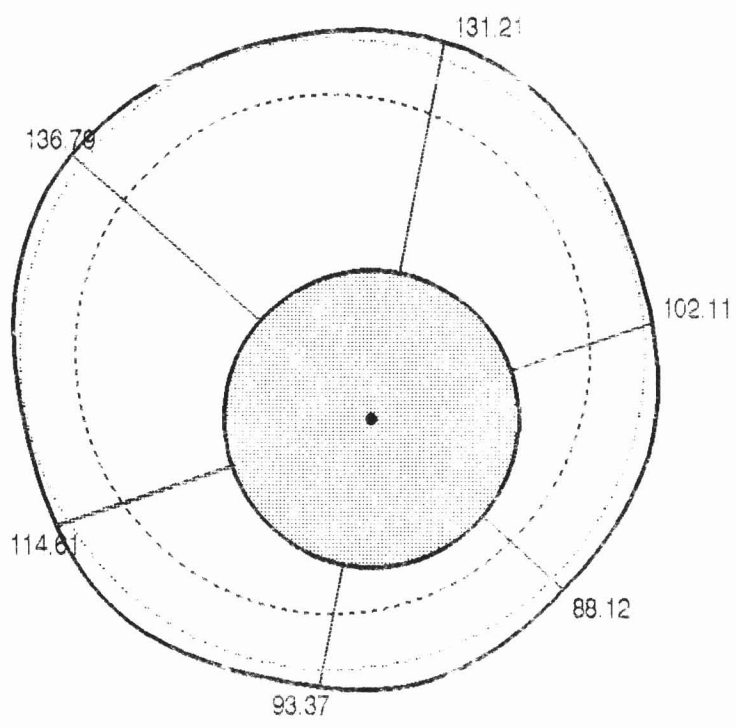	224.9	222.9	73.2	251.0
869.9	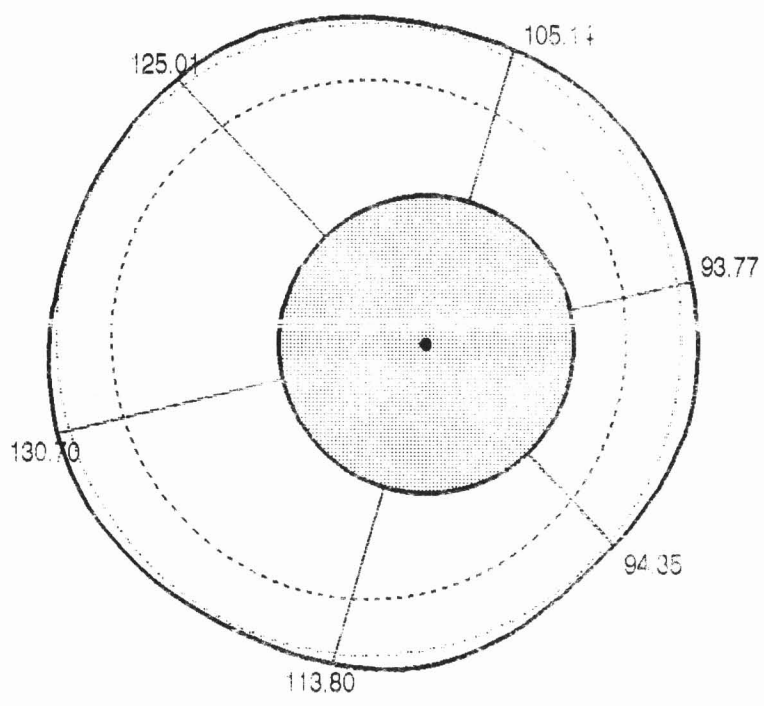	224.5	221.3	70.7	136.5
894.9	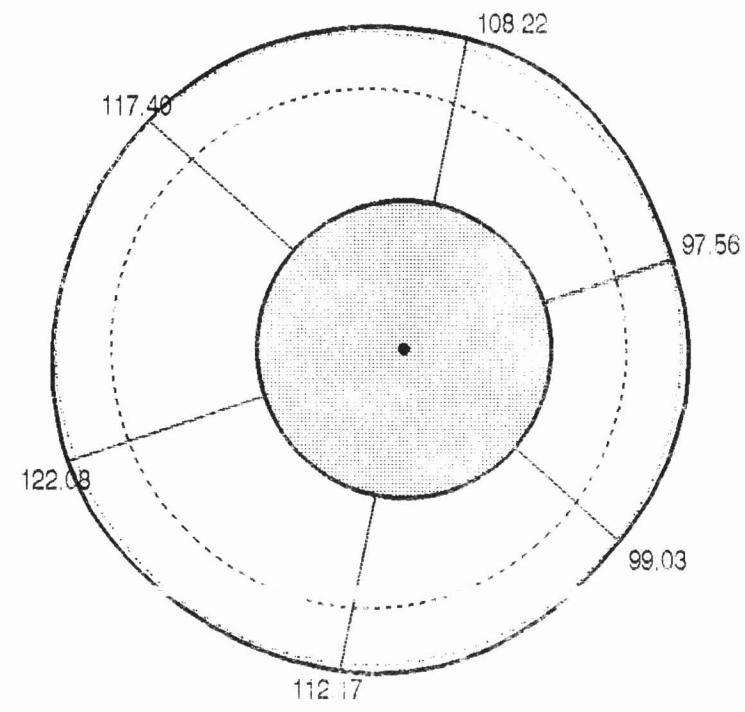	220.4	217.4	66.9	71.5
919.9	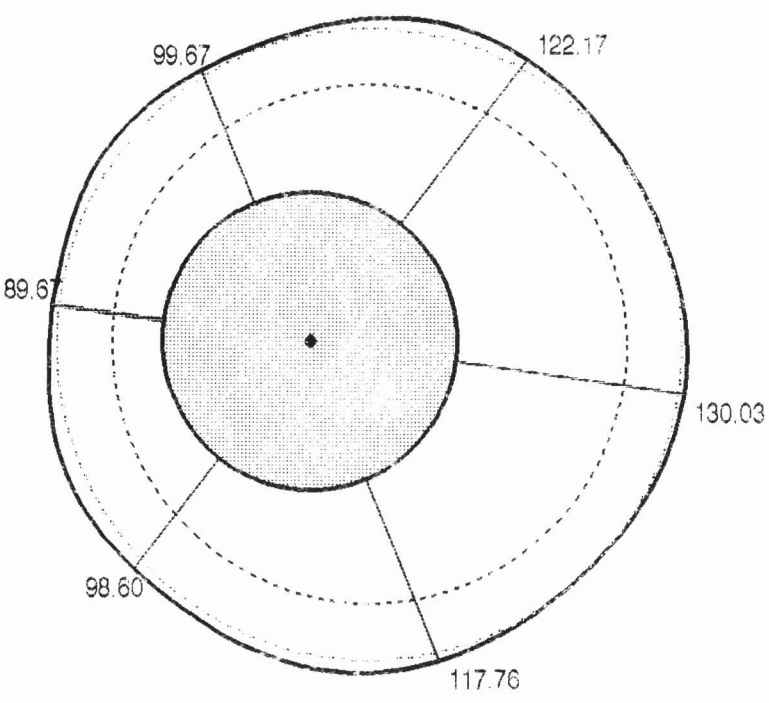	220.8	219.7	69.4	277.8
945.0	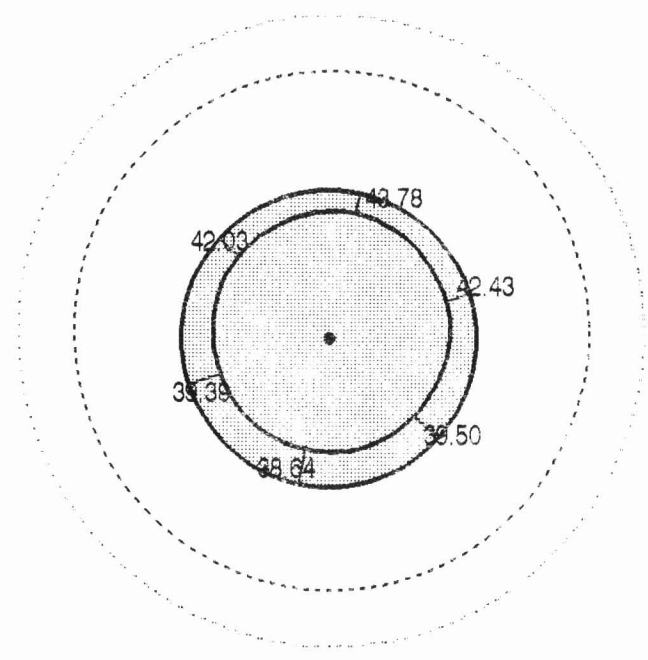	82.4	81.7	63.7	132.0

Future Casing Diameter (FCD)

-150.0 (MM) 150.0

Bit Size (BS)

-150.0 (MM) 150.0

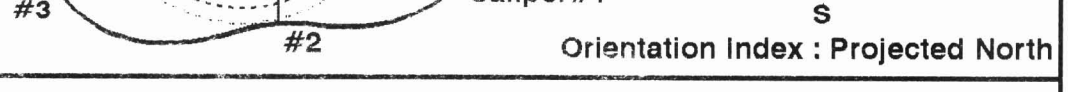

Parameters

DLIS Name	Description	Value
BGVS	Borehole Graphic Vertical Scale	D200_Metric
BGDI	Borehole Graphic Depth Interval	25_M
BGDM	Borehole Graphic Display Mode	Xsec_Tool_CalAll_Data
BGHW	Borehole Graphic Horizontal Width	300_MM
BGAI	Borehole Graphic Angle Index	Orient_from_Projected_North
BGUN	Borehole Graphic Unit	METRIC

Borehole Cross Section

Graphics File Name: BORE_GRAPHIC_3.PDS — Graphics File Created: 21-Feb-2004 11:36

Calibration and Check Summary

Measurement	Nominal	Master	Before	After	Change	Limit	Units
Oil Base Mud Formation Imager Tool B Wellsite Calibration - Caliper Calibration							
Before: 19-Feb-2004 21:06							
Caliper 1 Small Jig	203.2	N/A	208.7	N/A	N/A	N/A	MM
Caliper 2 Small Jig	203.2	N/A	210.9	N/A	N/A	N/A	MM
Caliper 1 Large Jig	304.8	N/A	319.3	N/A	N/A	N/A	MM
Caliper 2 Large Jig	304.8	N/A	321.7	N/A	N/A	N/A	MM
General Purpose Inclinometer Wellsite Calibration - CROUZET ACCELEROMETER PROM HAS BEEN READ CORRECTLY							
Before: 21-Feb-2004 8:53							
TEMPERATURE REFERENCE :	N/A	N/A	20	N/A	N/A	N/A	DEGC
YEAR OF CALIBRATION :	N/A	N/A	98	N/A	N/A	N/A	
MONTH OF CALIBRATION :	N/A	N/A	1	N/A	N/A	N/A	
SERIAL NUMBER :	N/A	N/A	686	N/A	N/A	N/A	
General Purpose Inclinometer Wellsite Calibration - CROUZET MAGNETOMETER PROM HAS BEEN READ CORRECTLY							
Before: 21-Feb-2004 8:53							
TEMPERATURE REFERENCE :	N/A	N/A	24	N/A	N/A	N/A	DEGC
YEAR OF CALIBRATION :	N/A	N/A	93	N/A	N/A	N/A	
MONTH OF CALIBRATION :	N/A	N/A	12	N/A	N/A	N/A	
SERIAL NUMBER :	N/A	N/A	186	N/A	N/A	N/A	
Environment Measurement Sonde Wellsite Calibration - EMS Caliper Calibration							
Before: 19-Feb-2004 20:39							
Radius 1 Short Radius	101.6	N/A	86.78	N/A	N/A	5.080	MM
Radius 1 Long Radius	203.2	N/A	191.0	N/A	N/A	5.080	MM
Radius 2 Short Radius	101.6	N/A	82.18	N/A	N/A	5.080	MM
Radius 2 Long Radius	203.2	N/A	186.6	N/A	N/A	5.080	MM
Radius 3 Short Radius	101.6	N/A	81.54	N/A	N/A	5.080	MM
Radius 3 Long Radius	203.2	N/A	186.4	N/A	N/A	5.080	MM
Radius 4 Short Radius	101.6	N/A	83.51	N/A	N/A	5.080	MM
Radius 4 Long Radius	203.2	N/A	188.7	N/A	N/A	5.080	MM
Radius 5 Short Radius	101.6	N/A	80.20	N/A	N/A	5.080	MM
Radius 5 Long Radius	203.2	N/A	186.1	N/A	N/A	5.080	MM
Radius 6 Short Radius	101.6	N/A	76.88	N/A	N/A	5.080	MM
Radius 6 Long Radius	203.2	N/A	181.7	N/A	N/A	5.080	MM
Scintillation Gamma-Ray - N Wellsite Calibration - Detector Calibration							
Before: 19-Feb-2004 19:51							
Gamma Ray (Jig - Bkg)	158.8	N/A	158.8	N/A	N/A	14.44	GAPI
Gamma Ray (Calibrated)	165.0	N/A	165.0	N/A	N/A	15.00	GAPI

Oil Base Mud Formation Imager Tool B / Equipment Identification

Primary Equipment:		
Oil Base Mud Formation Imager Sonde	OBMS - A	702
Oil Base Mud Formation Imager Cartridge	OBMC - A	702
Auxiliary Equipment:		
Oil Base Mud Formation Imager Housing	OBMH - A	702

Oil Base Mud Formation Imager Tool B Wellsite Calibration — Caliper Calibration

Phase	Caliper 1 Small Jig MM	Value	Phase	Caliper 2 Small Jig MM	Value
Before	172.7 (Minimum) / 203.2 (Nominal) / 233.7 (Maximum)	208.7	Before	172.7 (Minimum) / 203.2 (Nominal) / 233.7 (Maximum)	210.9
Phase	Caliper 1 Large Jig MM	Value	Phase	Caliper 2 Large Jig MM	Value
Before	259.1 (Minimum) / 304.8 (Nominal) / 350.5 (Maximum)	319.3	Before	259.1 (Minimum) / 304.8 (Nominal) / 350.5 (Maximum)	321.7

Before: 19-Feb-2004 21:06

General Purpose Inclinometer / Equipment Identification

Primary Equipment:		
GPIT Cartridge - C	GPIC - C	714
Auxiliary Equipment:		
GPIT Housing	GPIH - A	733

Environment Measurement Sonde / Equipment Identification

Primary Equipment:		
EMS Mechanical	EMM - B	8062
EMS Cartridge	EMC - B	8067
Auxiliary Equipment:		
Electronics Cartridge Housing	ECH - KH	8550

Environment Measurement Sonde Wellsite Calibration — EMS Caliper Calibration

Phase	Radius 1 Short Radius MM	Value	Phase	Radius 1 Long Radius MM	Value
Before	76.20 (Minimum) / 101.6 (Nominal) / 127.0 (Maximum)	86.78	Before	177.8 (Minimum) / 203.2 (Nominal) / 228.6 (Maximum)	191.0
Phase	Radius 2 Short Radius MM	Value	Phase	Radius 2 Long Radius MM	Value
Before	76.20 (Minimum) / 101.6 (Nominal) / 127.0 (Maximum)	82.18	Before	177.8 (Minimum) / 203.2 (Nominal) / 228.6 (Maximum)	186.6
Phase	Radius 3 Short Radius MM	Value	Phase	Radius 3 Long Radius MM	Value
Before	76.20 (Minimum) / 101.6 (Nominal) / 127.0 (Maximum)	81.54	Before	177.8 (Minimum) / 203.2 (Nominal) / 228.6 (Maximum)	186.4
Phase	Radius 4 Short Radius MM	Value	Phase	Radius 4 Long Radius MM	Value
Before	76.20 (Minimum) / 101.6 (Nominal) / 127.0 (Maximum)	83.51	Before	177.8 (Minimum) / 203.2 (Nominal) / 228.6 (Maximum)	188.7
Phase	Radius 5 Short Radius MM	Value	Phase	Radius 5 Long Radius MM	Value
Before	76.20 (Minimum) / 101.6 (Nominal) / 127.0 (Maximum)	80.20	Before	177.8 (Minimum) / 203.2 (Nominal) / 228.6 (Maximum)	186.1
Phase	Radius 6 Short Radius MM	Value	Phase	Radius 6 Long Radius MM	Value
Before	76.20 (Minimum) / 101.6 (Nominal) / 127.0 (Maximum)	76.88	Before	177.8 (Minimum) / 203.2 (Nominal) / 228.6 (Maximum)	181.7

Before: 19-Feb-2004 20:39

Scintillation Gamma-Ray - N / Equipment Identification

Primary Equipment:		
Scintillation Gamma Cartridge	SGC - TB	9586
Scintillation Gamma Detector	SGD - TAA	
Auxiliary Equipment:		
Scintillation Gamma Housing	SGH - K	9396
Gamma Source Radioactive	GSR - U/Y	

Scintillation Gamma-Ray - N Wellsite Calibration — Detector Calibration

Phase	Gamma Ray Background GAPI	Value	Phase	Gamma Ray (Jig - Bkg) GAPI	Value	Phase	Gamma Ray (Calibrated) GAPI	Value
Before	0 (Minimum) / 30.00 (Nominal) / 120.0 (Maximum)	22.96	Before	144.4 (Minimum) / 158.8 (Nominal) / 173.3 (Maximum)	158.8	Before	150.0 (Minimum) / 165.0 (Nominal) / 180.0 (Maximum)	165.0

Before: 19-Feb-2004 19:51

Company: **APACHE CANADA LTD.**

Schlumberger

Well: **APACHE PARAMOUNT LAC MAUNOIR C-34**
Field: **UNDEFINED**
Province: **NORTHWEST TERRITORIES**

CEMENT VOLUME LOG